Job Name/Title:_____ Model #:_____ Fixture Type:_____

TOPAZ®

End-to-End Connector Kits and Suspension Mount Cables sold separately

LED Linear Luminaire

4 FT TRI-PROOF VAPOR TIGHT

High Impact Lens and Aluminum Housing

Topaz's Tri-Proof Vapor Tight Luminaire is the perfect solution for a wide range of applications including garage, warehouse, stairwells, marine and subways. Provides an IP65 rated water proof, dust proof and corrosion proof luminaire. Superior quality compared to other products on the market, and offering 130 lumens per watt. The luminaire can be surface or suspension mounted.

FEATURES

- Aluminum housing for thermal management and polycarbonate lens
- 50W replaces 3x32W T8 fixture
- Battery backup version available
- 0-10V Dimmable version available by special order
- 6 foot power cord included
- ETL Sanitation Listed for Food Service Equipment
- 5 year warranty

APPLICATIONS

- Commercial, industrial or marine type applications such as parking garages, stairwells, docks, and subway stations.

DLC LISTED · Intertek · Intertek · NON-DIMMABLE LED · IP65 RATED · 5 YEAR WARRANTY

BUILT FOR DURABILITY. BUILT FOR RELIABILITY. BUILT FOR WORK.™

Halco Lighting Technologies 2940 Pacific Drive | Norcross, GA 30071 | Toll Free 800.677.3334 | Phone 770.242.3612
Fax 800.880.0822 | halcolighting.com | Atlanta | Cleveland | Houston | Phoenix | New Jersey © 2026 Halco Lighting Technologies, LLC. All rights reserved. Halco and ProLED are registered trademarks of Halco Lighting Technologies. All sizes and specifications are subject to change without notice.

TOPAZ®

GENERAL SPECIFICATIONS

Input Voltage: 120V-277V, 50/60Hz
Average Rated Life (L70): 50,000 hours
THD: <10%
Power Factor: >0.9
Beam Angle: 120°
CRI: 80
Ambient Operating Temperature: -40°F to 105°F
Unit Weight: 4.6 lbs. standard, 7.3 lbs. with battery backup

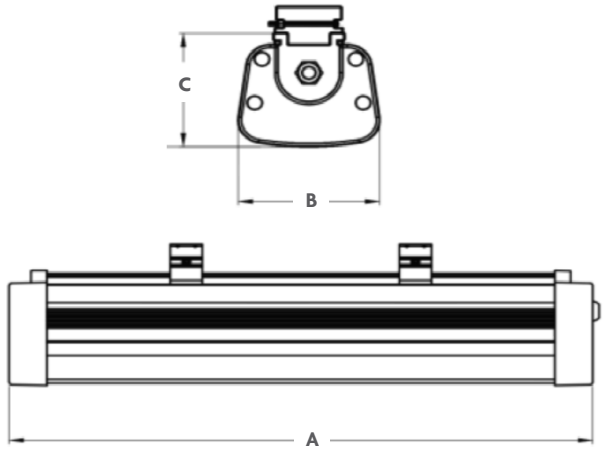

Dimensions	A (in)	B (in)	C (in)
	47.24"	3.78"	3.27"

SPECIFICATIONS / ORDER INFO

Catalog Number	Product Code	UPC	Watts	Lumens	LPW	Input Amps @120V	CCT (Kelvin)	DLC ID✦	Case Qty
F-VT4/50W/40K-86	71055	751338023420	50W	6,500	130	.42/.2A	4000K	PLOY7QLDKHPD	1/6
F-VT4/50W/50K-86	71056	751338023437	50W	6,500	130	.42/.2A	5000K	PLV92VSEI3JJ	1/6
With battery backup (≥90 minutes)									
F-VT4/50W/40K/EM-86	71058	751338023475	50W	5,750	115	.42/.2A	4000K	PLOY7QLDKHPD	1/6
F-VT4/50W/50K/EM-86	71059	751338023482	50W	5,750	115	.42/.2A	5000K	PLV92VSEI3JJ	1/6
Optional Suspension Mount Cable									
F-LED Cable 2PK	72708 (2 cables per set)								
Optional End-to-End Connector Kit									
F-VT Coupler	71040 (includes End-to-End bracket and 10" connection cord)								
Optional 10 Ft. Extended Connector Cord									
F-VT 10FT Cord	71033								

NOMENCLATURE

Example: F-VT4/50W/50K/EM
F=Fixture / **F-VT4**=LED Vapor Tight 4 Ft / **50W**=50 Watt / **40K**=4000K CCT / **Blank**=No Backup
50K=5000K CCT / **EM**=Emergency Backup

ENERGY SAVINGS

	LED Watts	Suggested Fluorescent Equivalent	Energy Savings, Watts	Yearly Saving, $	5 Year Savings, $
Based on 12 hours/day and .11/kwhr					
F-VT4/50W/xxK	50W	96W	46W	$22.16	$110.80

NOTES:
✦DLC Primary Use Designation: Direct Linear Ambient Luminaires

Specifications subject to change without prior notice. Replacement wattage shown depends on application and fixture.

This device complies with Part 15 of the FCC Rules. Operation is subject to the following two conditions: (1) this device may not cause harmful interference, and (2) this device must accept any interference received, including interference that may cause undesired operation.

BUILT FOR DURABILITY.
BUILT FOR RELIABILITY.
BUILT FOR WORK.™

Halco Lighting Technologies 2940 Pacific Drive | Norcross, GA 30071 | Toll Free 800.677.3334 | Phone 770.242.3612
Fax 800.880.0822 | halcolighting.com | Atlanta | Cleveland | Houston | Phoenix | New Jersey © 2026 Halco Lighting Technologies, LLC. All rights reserved. Halco and ProLED are registered trademarks of Halco Lighting Technologies.
All sizes and specifications are subject to change without notice.

TOPAZ®

Legend: C0-Black, C45-Green, C90-Blue (cd)

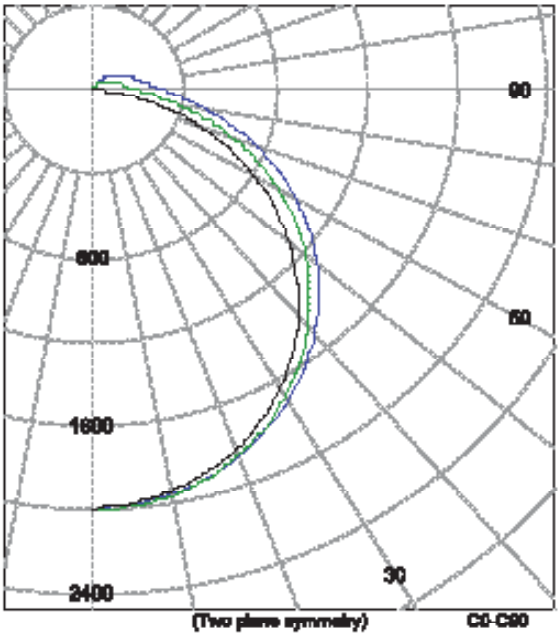

INTENSITY SUMMARY (cd)

Gamma	C-Plane C0	C22.5	C45	C67.5	C90	Flux (lm)
0.0	1994	1994	1994	1994	1994	
5.0	1976	1977	1982	1990	1991	199
10.0	1946	1948	1953	1963	1968	
15.0	1883	1896	1918	1919	1914	939
20.0	1823	1829	1852	1869	1868	
25.0	1757	1744	1773	1788	1780	814
30.0	1636	1648	1681	1701	1707	
35.0	1528	1584	1578	1663	1614	663
40.0	1396	1412	1466	1490	1510	
45.0	1269	1282	1344	1378	1388	1029
50.0	1116	1147	1218	1288	1278	
55.0	966	1007	1079	1139	1152	865
60.0	811	862	938	982	1021	
65.0	582	711	788	888	884	773
70.0	480	554	642	718	748	
75.0	326	399	499	579	610	616
80.0	176	257	384	483	488	
85.0	55	144	248	349	382	272
90.0	0	61	169	274	309	

ZONAL FLUX AND PERCENTAGES

Zone	Flux (lm)	% Lamp	% Luminaire
0-30	1641	N/A	23.3
0-40	2524	N/A	35.2
0-60	4808	N/A	68.2
0-90	6088	N/A	91.4
40-90	3544	N/A	53.6
60-90	1560	N/A	23.6
90-180	841	N/A	8.2
0-180	6608	N/A	100.0

Total Light Output = 6,608 lm

Spacing Criteria:	0-180	1.2
Spacing Criteria:	90-270	1.3

Coefficients Of Utilization - Zonal Cavity Method
Effective Floor Cavity Reflectance 0.20

RC	80				70				50			30			10			0
RW	70	50	30	10	70	50	30	10	50	30	10	50	30	10	50	30	10	0
0	117	117	117	117	113	113	113	113	107	107	107	100	100	100	88	88	88	82
1	106	100	95	91	102	97	93	89	93	88	85	85	82	80	81	79	77	74
2	96	87	80	74	92	84	78	72	79	74	69	75	70	66	71	67	64	61
3	87	78	67	61	84	74	66	60	70	62	56	66	60	55	63	57	54	51
4	79	67	58	51	78	63	57	50	61	54	49	58	53	47	58	50	46	45
5	73	60	51	44	73	58	50	43	55	48	43	52	46	41	50	44	40	37
6	67	54	45	38	65	52	44	38	50	42	37	47	41	36	45	39	35	33
7	62	48	40	34	60	47	39	33	45	38	33	43	36	32	41	35	31	29
8	58	44	36	30	56	43	35	30	41	34	29	39	33	28	38	32	27	26
9	54	41	32	27	52	40	32	26	38	31	26	36	30	25	35	29	25	23
10	51	37	30	24	49	37	29	24	35	28	23	34	27	23	33	27	22	21

AVERAGE LUMINANCE (cd / m^2)

Gamma	C0	C45	C90
45.0	16964	14485	14399
55.0	14969	13379	13377
65.0	12687	11981	12296
75.0	10726	10056	10889
85.0	4714	9257	10012

Circle of Light Plot

Height(ft)	Illuminance at Nadir (fc)	Beam Width (across 50% Nadir Illum) 0-180	90-270
6.0	55.4	7.34	7.65
8.0	31.1	9.78	10.19
10.0	19.9	12.23	12.74
12.0	13.8	14.67	15.29
14.0	10.2	17.12	17.84
16.0	7.8	19.57	20.39

BUILT FOR DURABILITY.
BUILT FOR RELIABILITY.
BUILT FOR WORK.™

Halco Lighting Technologies 2940 Pacific Drive | Norcross, GA 30071 | Toll Free 800.677.3334 | Phone 770.242.3612
Fax 800.880.0822 | halcolighting.com | Atlanta | Cleveland | Houston | Phoenix | New Jersey © 2026 Halco Lighting Technologies, LLC. All rights reserved. Halco and ProLED are registered trademarks of Halco Lighting Technologies. All sizes and specifications are subject to change without notice.