LBS Lighting

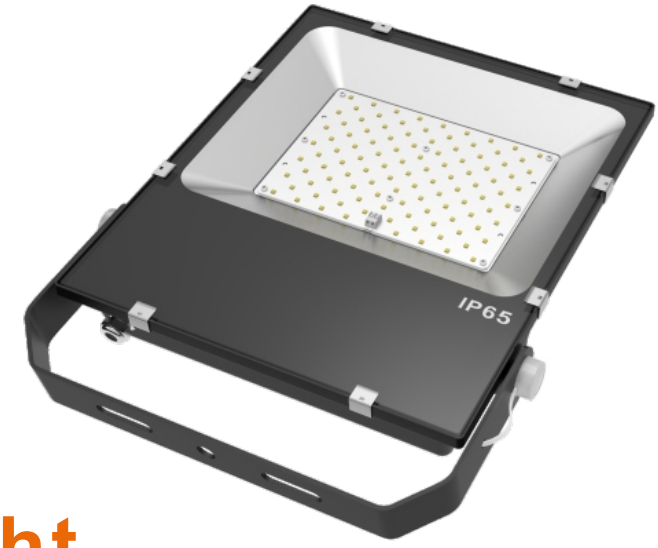

LED Large Flood Light

5002090

Specification

LED Flood Light					
Power	50W	70W	100W	150W	200W
Lumen (lm)	6000	8400	12000	18000	24000
Luminous Efficacy	120lm/W				
Color Range	5000K				
Light Source	Lumileds SMD3030				
Housing	AL + Tempered Glass				
Operation Temperature	-4~113 F degree				
Life Span	50,000hours				
Voltage range	AC100-277V				
Freqiency	50/60Hz				
Beam angle	120°				
Color index(CRI)	>70Ra				
Power Factor	>0.95				
Power Effciency	>0.9				
Certification	DLC ETL cETL				
Warranty	5 Years				

Features

1. Lumileds 3030 LED, high luminous flux, energy saving obviously.
2. Wide range voltage AC100-277V
3. Use the most effeciency integrated aluminum alloy, the completed lamp can work above 50000hrs
4. Aluminum alloy housing processed with anodization, solid in structure and withstand the corrosion.
5. Heat sink of different sizes according to varied lighting requirement.
6. Protection rate: IP65.
7. flexible position makes project angle can be adjusted within 216° .

Dimensions

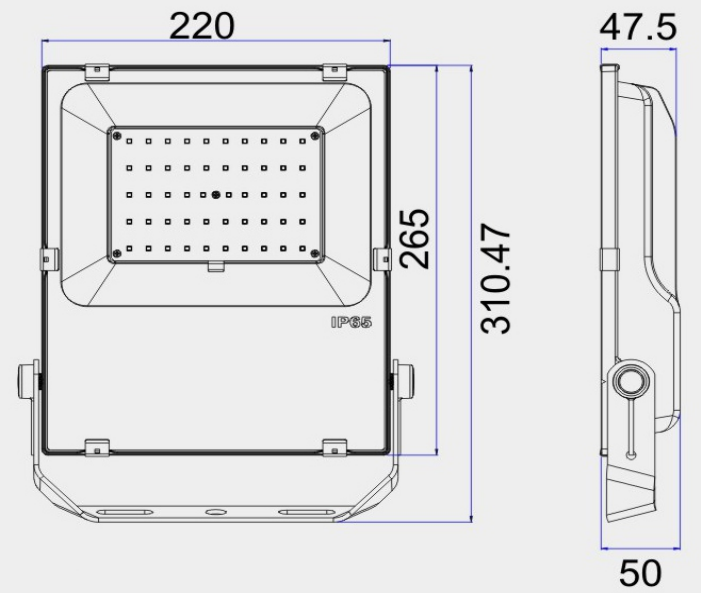

50W

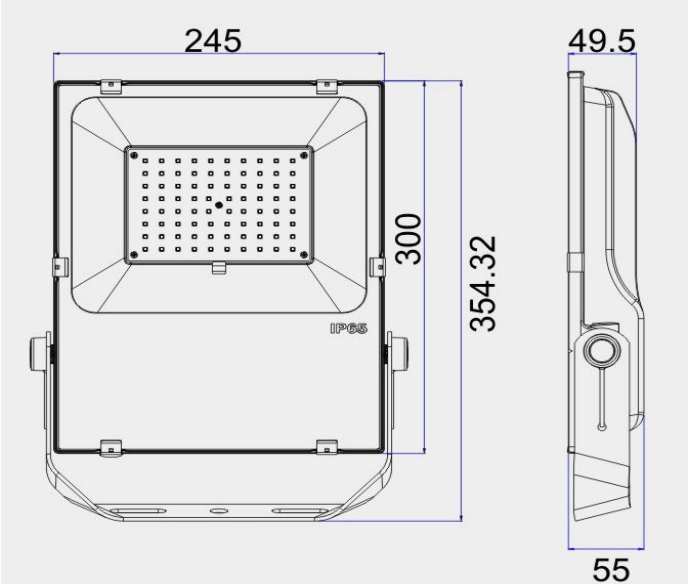

70W

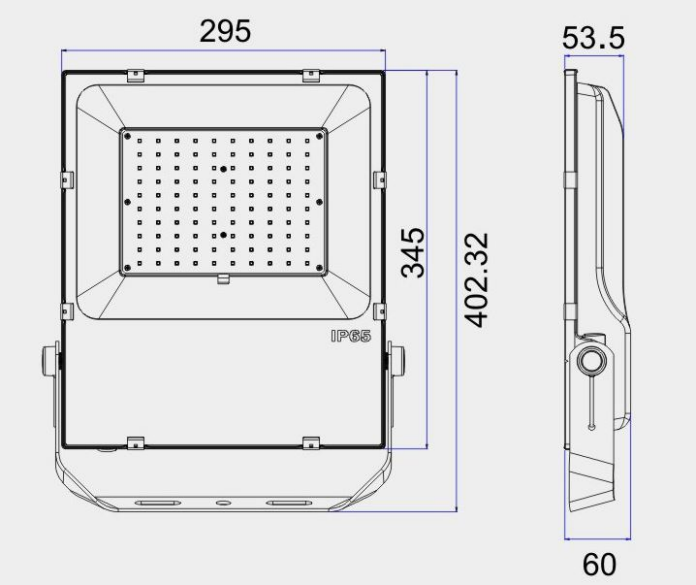

100W

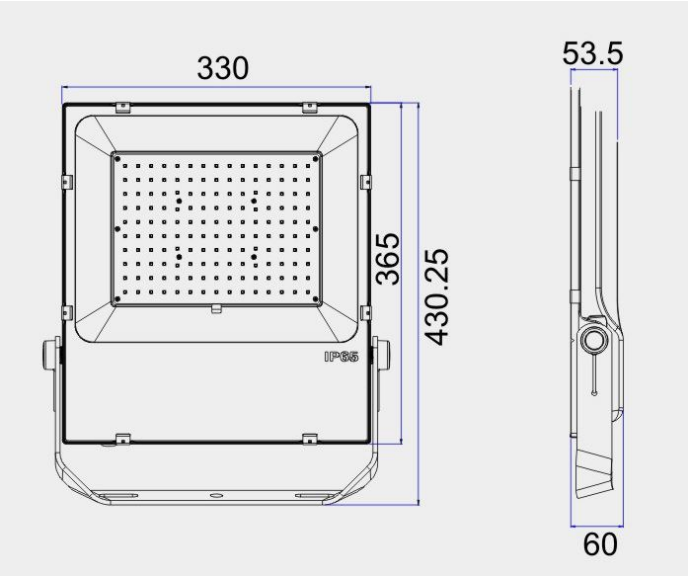

150W

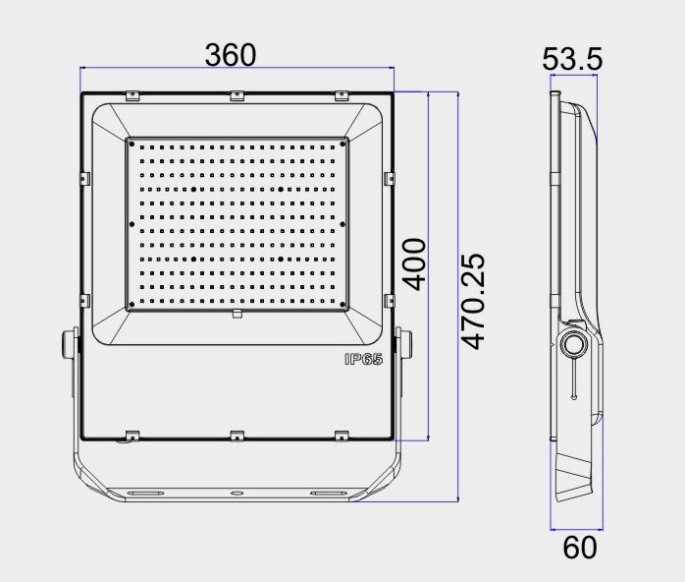

200W

LBS Lighting

Packing

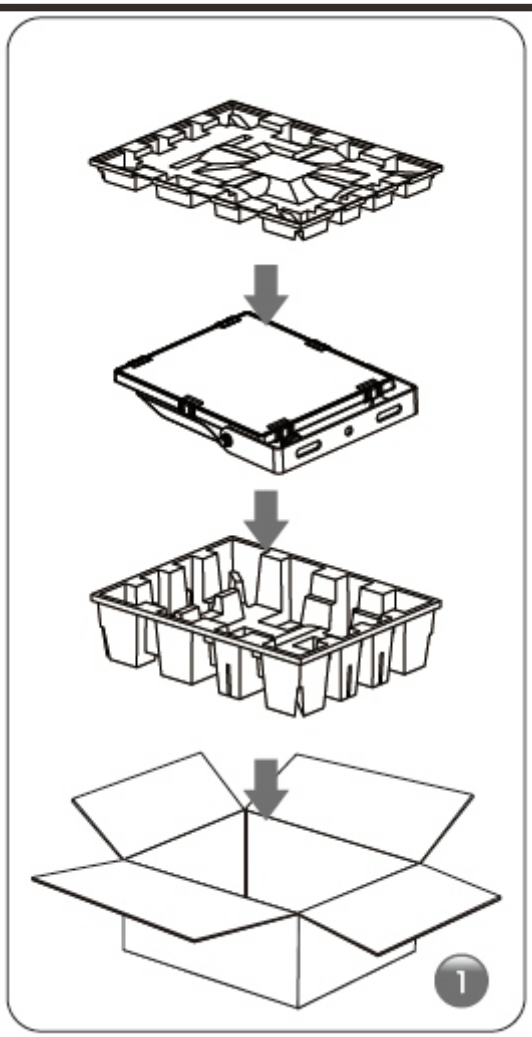

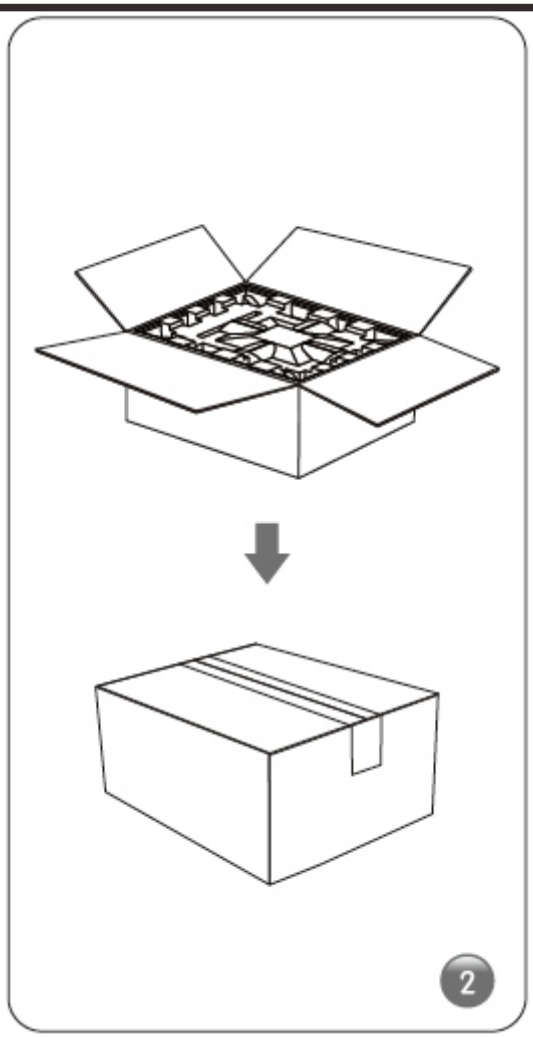

Shipping Dimensions

Wattage	Qty/Carton	L (in)	W (in)	H (in)	Weight (lbs)
50W	8	20.8	14.6	10.2	39.6
70W	1	17.3	13.4	5.1	7.0
100W	1	18.9	15.7	5.5	12.1
150W	1	20.5	17.3	5.5	15.2
200W	1	22.0	18.5	5.5	17.8