SATCO | NUVO

LED MONOPOINT

BEAM ADJUSTABLE | CCT SELECTABLE







BEAM ADJUSTABLE FROM 20° TO 50°

LOW PROFILE CANOPY MOUNTS DIRECTLY TO J-BOX

5 CCT SELECTABLE

90+ CRI HIGH-QUALITY LIGHT

SUGGESTED APPLICATIONS

Accent Lighting
Museums & Galleries
Retail & Hospitality
Residential

SATCO|NUVO LED Monopoint luminaires mount directly to a junction box for a versatile addition to your track lighting needs. These Monopoints offer selectable color temperature and adjustable beam angles that can be changed right out of the box. Beam angles range from 20° to 50° in 10, 15 or 30W options, with a 90° tiltable head for a customizable lighting solution. Five color temperatures are available with an impressive 90+ CRI rating to provide high-quality illumination ideal for any space. LED Monopoints are available in matte black or matte white finish options and will beautify any area with energy saving efficiency.

CCT SELECTABLE | DIMMABLE | 50,000 HOURS | DAMP LOCATION

SATCO | NUVO

LED MONOPOINT
BEAM ADJUSTABLE | CCT SELECTABLE

GENERAL SPECIFICATIONS

Input Voltage: 120V
Frequency: 60Hz
Power Factor: >0.9
Efficacy: 70 LPW
CRI: 90+
CCT Selectable: 2700/3000/3500/4000/5000K
Dimmable: Phase-Cut Dimmable Down to 10%
Beam Angle: 20°-50°
Location Rating: Damp

IP Rating: IP20
Ambient Operating Temperature: -4°F to +113°F (-20°C to +45°C)
Mounting: Direct to Junction Box
Shape: Cylinder
Construction: Iron/Aluminum
Lens Material: Polycarbonate (PC)
Functional Life (L70): 50,000 Hours
Warranty: 3 Year Limited

ITEM SPECIFICATIONS / ORDER INFO

Item	Wattage	Max Lumens	Input Current	Finish	Case QTY
62-3501	10W	700	0.10A	White	12
62-3502	10W	700	0.10A	Black	12
62-3503	15W	1050	0.15A	White	12
62-3504	15W	1050	0.15A	Black	12
62-3505	30W	2100	0.30A	White	12
62-3506	30W	2100	0.30A	Black	12

DIMENSIONS / WEIGHTS

Item	Length (A)	Width (B)	Height (C)	Extends (D)	Weight
62-3501	5.20"	4.60"	2.00"	5.70"	1.04 Lbs.
62-3502	5.20"	4.60"	2.00"	5.70"	1.04 Lbs.
62-3503	6.30"	4.60"	2.40"	6.90"	1.66 Lbs.
62-3504	6.30"	4.60"	2.40"	6.90"	1.66 Lbs.
62-3505	6.90"	4.60"	3.10"	7.90"	2.37 Lbs.
62-3506	6.90"	4.60"	3.10"	7.90"	2.37 Lbs.

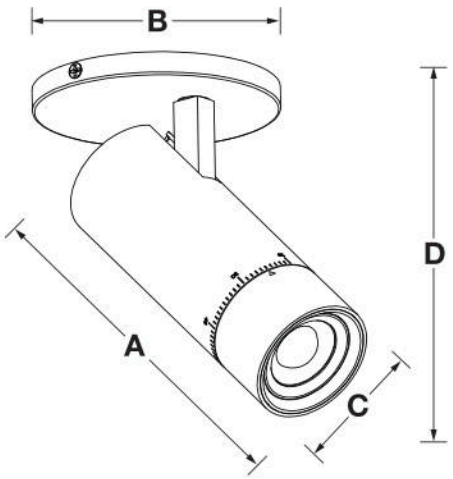

FEATURES


Low Profile Canopy Mounts Directly to J-Box



Beam Adjustable 20° to 50°



CCT Selectable


Housing Tiltable to 90°

May not be compatible with all dimmers. See satco.com for details
Specifications are subject to change without prior notice.
WARNING: This product can expose you to chemicals including Lead which is known to the State of California to cause cancer, or birth defects, or other reproductive harm. For more information, go to http://www.P65Warnings.ca.gov.
This device complies with Part 15 of the FCC Rules. Operation is subject to the following two conditions: (1) this device may not cause harmful interference, and (2) this device must accept any interference received, including interference that may cause undesired operation.
Meets requirements of ICES-005 issue 5 class B for use in residential and commercial applications.
Visit satco.com/service/warranty for complete warranty details.

SATCO.COM | 800-437-2826

© Satco Products, Inc. All rights reserved. 6/26 SN2067