SATCO | NUVO

HIGH PERFORMANCE FLOOD LIGHTS

BEAM SELECTABLE | FIELD SELECTABLE





BEAM SELECTABLE:
4VX4H / 5VX5H / 6VX6H

FIELD SELECTABLE:
3 CCT & 3 WATTAGE

RANGE VOLTAGE 120V-347V

INTEGRATED BY-PASSABLE PHOTOCELL

SUGGESTED APPLICATIONS
Flagpole Illumination
Landscape and Garden Lighting
Architectural Uplighting
Building Façade Highlighting
Sign and Monument Lighting

BEAM SELECTABLE

The SATCO|NUVO High Performance LED flood lights deliver precise, targeted illumination for outdoor applications where control and flexibility are essential. Featuring NEMA beam angle selectability, these fixtures allow for tailored light distribution to suit specific lighting objectives, from narrow spot lighting to broader coverage. Selectable wattage and CCT further enhances versatility, enabling installers to adjust light output and energy consumption on-site. Multiple lumen packages support a range of mounting heights and project requirements, while the compact design ensures a clean, unobtrusive appearance. Built for durability with IP65 and IK10 ratings, these flood lights are engineered to perform reliably in demanding outdoor environments. Ideal for highlighting vertical elements and focused lighting applications, they provide consistent performance across both available finish options.

FIELD SELECT | 120-347V | 0-10V DIMMING | WET LOCATION | IP 65 | IK 10 | 50,000 HOURS | 5 YEAR WARRANTY | TRUSTED NLB WARRANTY

SATCO | NUVO

HIGH PERFORMANCE FLOOD LIGHTS
BEAM SELECTABLE | FIELD SELECTABLE

GENERAL SPECIFICATIONS

Range Voltage : 120V-347V
Frequency: 50/60Hz
Power Factor: >0.9
THD: <20%
Dimming: 0-10V Dimmable
Surge Protection Rating: 4kV
Efficacy: up to 120 LPW
CRI: 70
CCT Selectable: 3000K/4000K/5000K

Beam Selectable: 4Vx4H/5Vx5H/6Vx6H
Location Rating: Wet
IP Rating: IP65
Ik Rating: IK10
Ambient Operating Temperature : -40°C (-40°F) to +45°C (+113°F)
Housing Material: Die-Cast Aluminum
Lens Material: Polycarbonate (PC)
Functional Life: 50,000 Hours
Warranty: 5 Years

ITEM SPECIFICATIONS / ORDER INFO

Item	Finish	Lumens	Wattage Selectable	Input Current	DLC ID
65-1250	Bronze	3000/2400/1800	25W/20W/15W	0.21-0.07/0.17-0.06/0.13-0.04A	S-0SG3L3
65-1251	Black	3000/2400/1800	25W/20W/15W	0.21-0.07/0.17-0.06/0.13-0.04A	S-0SG3L3

DIMENSIONS / WEIGHTS

Item	Length (A)	Width (B)	Height (C)	Mounting Plate Diameter (D)	Weight
65-1250	7.71"	4.82"	4.92"	4.50"	1.32 Lbs.
65-1251	7.71"	4.82"	4.92"	4.50"	1.32 Lbs.

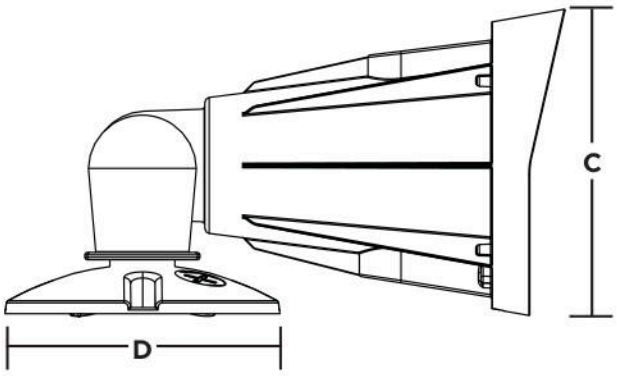

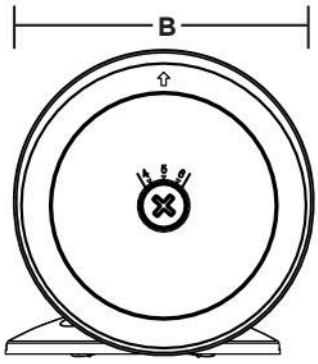

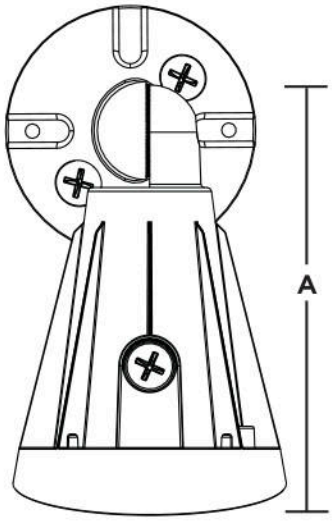


Beam Selectable Dial &
IK10 Vandal Resistant Lens



CCT & Wattage
Selectable Switches


Integrated By-Passable
Photocell


1/2" Knuckle Mount with included
Mounting Plate

This device complies with Part 15 of the FCC Rules. Operation is subject to the following two conditions: (1) this device may not cause harmful interference, and (2) this device must accept any interference received, including interference that may cause undesired operation.

WARNING: Some products included in this specification sheet may be subject to the warning requirements of California's Proposition 65. Please refer to your product packaging for more information.

Meets requirements of ICES-005 issue 5 class A for use in commercial applications.

Fixture may not be compatible with all dimmers. See satco.com for details

Specifications are subject to change without prior notice.

Visit satco.com/service/warranty for complete warranty details.

SATCO.COM | 800-437-2826

© Satco Products, Inc. All rights reserved. 4/26 SN2014