SATCO|NUVO

DUAL HEAD SECURITY LIGHTS

SQUARE HEADS | STANDARD & MOTION SENSOR MODELS





65-1400



65-1403

DIE-CAST ALUMINUM CONSTRUCTION

120-277V UNIVERSAL VOLTAGE INCLUDING MOTION SENSOR MODELS

FULLY ARTICULATING & LOCKABLE HEADS

CCT SELECTABLE 3000/4000/5000K

STANDARD AND MOTION SENSOR MODELS WITH DUSK-TO-DAWN OPTIONS

SUGGESTED APPLICATIONS

Walkways
Driveways
Garages
Sheds
Patios

SATCO|NUVO's Dual Head Security Lights deliver dependable outdoor illumination for residential and commercial applications. Available in an architectural square head design, these fixtures feature selectable 3000K, 4000K, and 5000K color temperatures and are offered in black, white, and bronze finishes to complement a variety of exteriors. Constructed from rugged die-cast aluminum for lasting durability, the adjustable lamp heads articulate for precise aiming and lock securely into place. Available with or without an integrated motion sensor, every model operates on universal 120-277V input voltage, including sensor versions. Motion sensor models also function as dusk-to-dawn fixtures with convenient wall switch override, while the IP65-rated housing provides reliable protection against the elements.

CCT SELECTABLE | 120-277V | WET LOCATION | IP65 | 50,000 HOURS | 5 YEAR WARRANTY | TRUSTED NB WARRANTY

DUAL HEAD SECURITY LIGHTS
SQUARE HEADS | STANDARD & MOTION SENSOR MODELS

GENERAL SPECIFICATIONS

Input Voltage: 120-277V
Frequency: 50/60Hz
THD: <20%
Dimmable: Non-Dimmable
Surge Protection Rating: 2kV
CCT Selectable: 3000K/4000K/5000K
Wattage: 20W
Max. Replacement Wattage: 125W
Input Current @ 120V/277V: 0.18-0.08A

Beam Angle: 70°
Efficacy: Up to 100 LPW
CRI: 80+
Location Rating: Wet
IP Rating: IP65
Ambient Operating Temperature: -40°F to +122°F (-40°C to +50°C)
Housing Material: Die-Cast Aluminum
Rated Life Hours: 50,000 Hours
Warranty: 5 Year

MOTION SENSOR SPECIFICATIONS

Motion Sensor Type: PIR
Detection Range: Up to 60 feet
Detection Angle: 180°

Time Setting: 10 Seconds to 10 Minutes
Dusk to Dawn Feature: Yes
Manual Override Available: Yes

ITEM SPECIFICATIONS / ORDER INFO

Item	Lumens	Housing Color	Lens Finish/ Material	Head Shape	Mounting Options
STANDARD MODELS					
65-1400	1800/1900/2000	White	Glass/Frosted	Square	Recessed J-Box Mount Wall/Eave
65-1402	1800/1900/2000	Bronze	Glass/Frosted	Square	Recessed J-Box Mount Wall/Eave
65-1404	1800/1900/2000	Black	Glass/Frosted	Square	Recessed J-Box Mount Wall/Eave
MOTION SENSOR MODELS					
65-1401	1800/1900/2000	White	Glass/Frosted	Square	Recessed J-Box Mount Wall/Eave
65-1403	1800/1900/2000	Bronze	Glass/Frosted	Square	Recessed J-Box Mount Wall/Eave
65-1405	1800/1900/2000	Black	Glass/Frosted	Square	Recessed J-Box Mount Wall/Eave

© Satco Products, Inc. All rights reserved. 08/26 S2098

DUAL HEAD SECURITY LIGHTS

SQUARE HEADS | STANDARD & MOTION SENSOR MODELS

DIMENSIONS / WEIGHTS

Item	Width (A)	Height (B)	Extends (C)	Weight
65-1400	7.64"	4.65"	7.05"	2.63 Lbs.
65-1401	7.64"	5.00"	7.05"	2.89 Lbs.
65-1402	7.64"	4.65"	7.05"	2.63 Lbs.
65-1403	7.64"	5.00"	7.05"	2.89 Lbs.
65-1404	7.64"	4.65"	7.05"	2.63 Lbs.
65-1405	7.64"	5.00"	7.05"	2.89 Lbs.

SQUARE HEAD SECURITY LIGHT

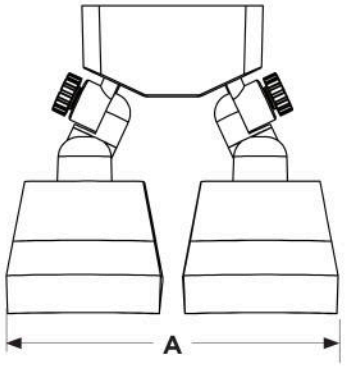

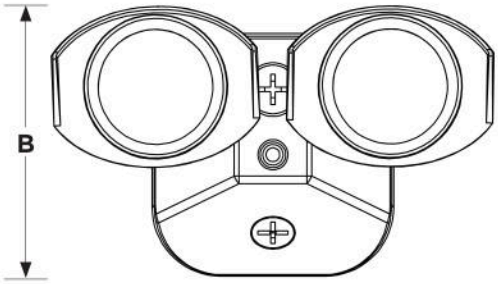

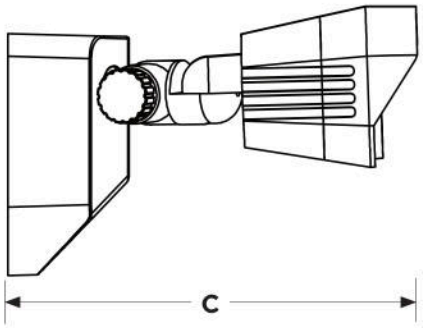

SQUARE HEAD SECURITY LIGHT WITH MOTION SENSOR

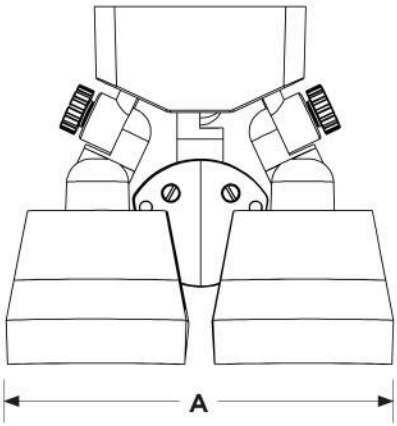

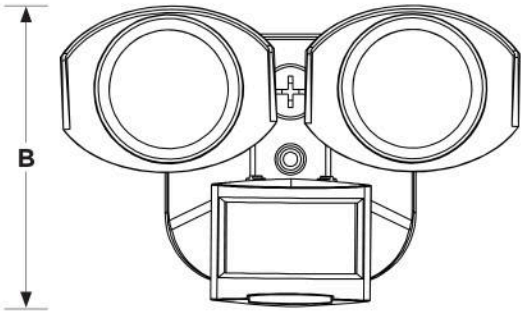

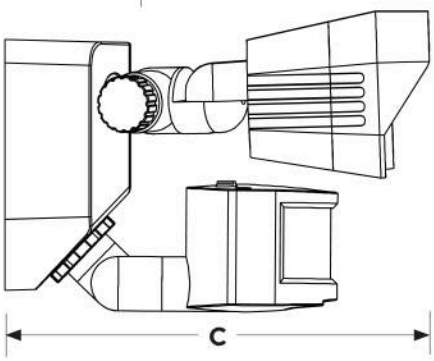

© Satco Products, Inc. All rights reserved. 08/26 S2098

SATCO | NUVO

DUAL HEAD SECURITY LIGHTS

SQUARE HEADS | STANDARD & MOTION SENSOR MODELS

DUAL HEAD SQUARE SECURITY LIGHT MODEL

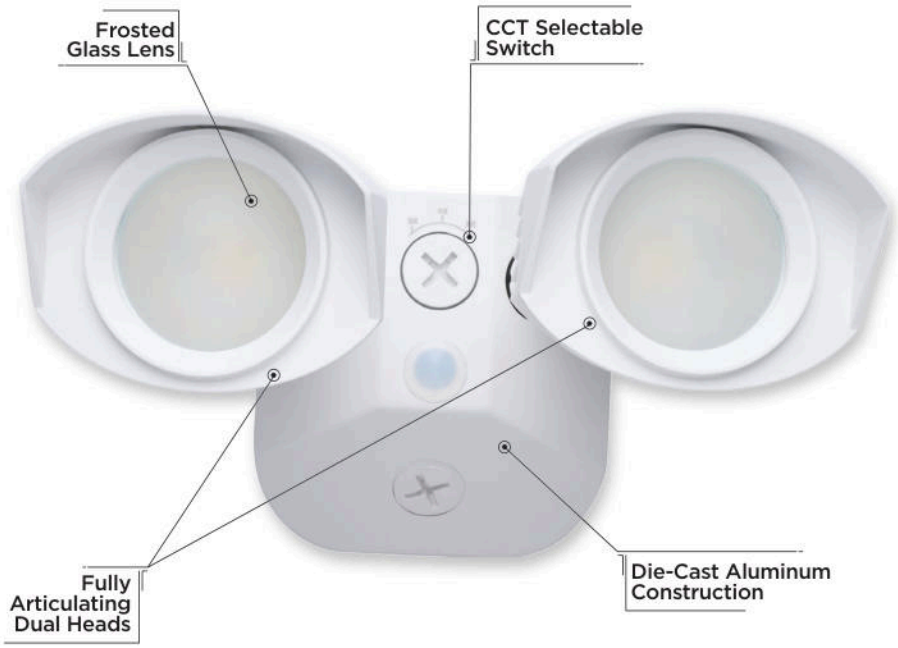

DUAL HEAD SQUARE SECURITY LIGHT MODEL WITH MOTION SENSOR



For warranty visit:
satco.com/service/warranty

This device complies with Part 15 of the FCC Rules. Operation is subject to the following two conditions: (1) this device may not cause harmful interference, and (2) this device must accept any interference received, including interference that may cause undesired operation.

WARNING: Some products included in this specification sheet may be subject to the warning requirements of California's Proposition 65. Please refer to your product packaging for more information.

Meets requirements of ICES-005 issue 5 class B for use in residential and commercial applications.

MIN 75°C SUPPLY CONDUCTORS.

IMPORTANT: This product must be installed in accordance with the applicable installation code by a person familiar with the construction and operation of the product and the hazards involved.

CONSULT A QUALIFIED ELECTRICIAN TO ENSURE CORRECT BRANCH CIRCUIT CONDUCTOR.

Specifications are subject to change without prior notice.

SATCO.COM | 800-437-2826

© Satco Products, Inc. All rights reserved. 08/26 S2098