SATCO | NUVO

LED FLOOD LIGHTS

BEAM SELECTABLE | FIELD SELECTABLE

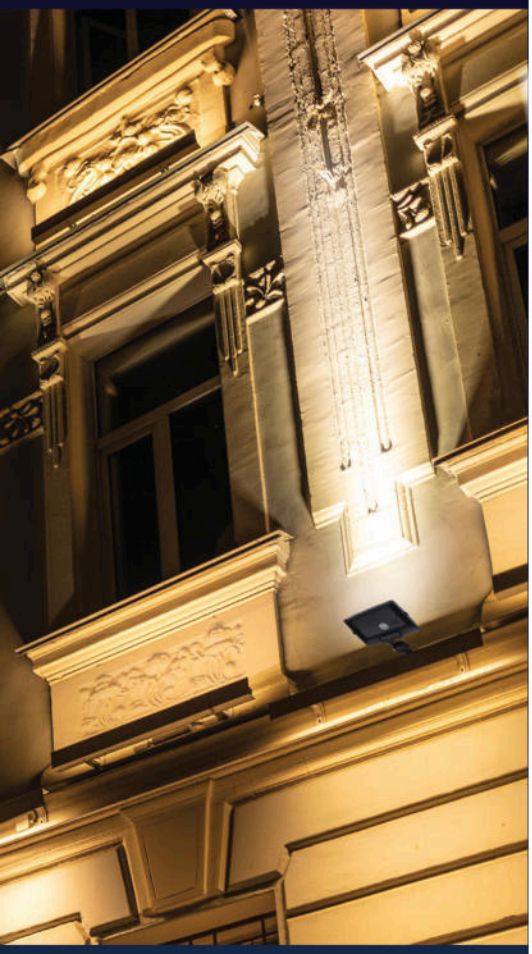



65-1540 | 65-1541

Equipped with a 1/2" knuckle mount and separate mounting plate



65-1542 | 65-1543

Equipped with a 2 3/8" slip-fitter mount

BEAM SELECTABLE

BEAM SELECTABLE: 7Vx6H / 6Vx6H / 5Vx5H

DLC PREMIUM LISTED

MULTIPLE WATTAGE PACKAGES AVAILABLE

3 CCT SELECTABLE: 3000K/4000K/5000K

INTEGRATED BY-PASSABLE PHOTOCELL

SUGGESTED APPLICATIONS

Commercial, Residential, Loading Docks, Site Lighting, Wall Wash, Pole Lighting

The SATCO|NUVO LED Beam Selectable Flood Lights deliver adaptable outdoor illumination with precision-controlled light distribution. Beam selectability offers 7Vx6H, 6Vx6H, or 5Vx5H distributions for optimized coverage. Fixtures also feature 3 CCT selectability (3000K/4000K/5000K) and four selectable wattage package models, producing lumen outputs from approximately 2,000 in the smallest footprint to 47,000 in the largest. Constructed with die-cast aluminum housings and glass lenses in a bronze finish, these flood lights are IP65 and IK07 rated, DLC 6.0 Listed, supporting evolving efficiency standards, and suitable for wet locations. All models operate on 120–347V, include an integrated by-passable photocell, and offer size-appropriate mounting options, with additional mounting accessories available separately. A 50,000-hour rated life and 5-year warranty ensure long-term performance.

FIELD SELECT | 120-347V | 0-10V DIMMING | WET LOCATION | IP 65 | IK 07 | 6KV SURGE PROTECTION | DLC LISTED PREMIUM | 50,000 HOURS | 5YEAR WARRANTY | TRUSTED NB BRANDS

SATCO | NUVO

LED FLOOD LIGHTS
BEAM SELECTABLE | FIELD SELECTABLE

GENERAL SPECIFICATIONS

Input Voltage: 120V-347V
Frequency: 50/60Hz
Power Factor: >0.9
THD %: <20%
Dimming: 0-10V Dimmable
Surge Protection Rating: 6kV
CRI: 80
CCT Selectable: 3000K/4000K/5000K
BUG Rating: B4-U0-G5

Location Rating : Wet
IP Rating : IP65
IK Rating : IK07
Ambient Operating Temperature: -40°C (-40°F) to +50°C (+122°F)
Housing Material: Die-Cast Aluminum
Lens Material: Glass
Finish: Bronze
Functional Life: 50,000 Hours
Warranty: 5 Years

ITEM SPECIFICATIONS / ORDER INFO

Item	Lumens	Wattage Selectable	Input Current	Beam Selectable	Efficacy	DLC ID
65-1540	1998-5292	35W/25W/15W	0.29-0.10/0.21-0.07/0.13-0.04A	135°x125°/120°x120°/90°x90°	up to 153 LPW	S-N5DB5B
65-1541	6757-11846	80W/60W/45W	0.67-0.23/0.50-0.17/0.38-0.13A	135°x125°/120°x120°/90°x90°	up to 150 LPW	S-00T2FY
65-1542	15024-22754	150W/125W/100W	1.25-0.43/1.04-0.36/0.83-0.29A	135°x125°/120°x120°/90°x90°	up to 151 LPW	S-CYKVFG
65-1543	29611-47273	300W/250W/200W	2.50-0.86/2.08-0.72/1.67-0.58A	135°x125°/110°x110°/95°x95°	up to 157 LPW	S-2Z9ZF6

OPTIONAL ACCESSORIES (SOLD SEPARATELY)

Item	Description	Finish	Image
FOR USE WITH 65-1540			
65-1545	Yoke Mount for Beam Selectable 15/25/35 Watt Flood Light	Bronze	
FOR USE WITH 65-1541			
65-1546	Yoke Mount for Beam Selectable 45/60/80 Watt Flood Light	Bronze	
FOR USE WITH 65-1542			
65-1547	Yoke Mount for Beam Selectable 100/125/150 Watt Flood Light	Bronze	
FOR USE WITH 65-1543			
65-1548	Yoke Mount for Beam Selectable 200/250/300 Watt Flood Light	Bronze	
FOR USE WITH 65-1540 & 65-1541			
65-1549	Trunnion Mount for 35-80 Watt Beam Selectable Flood Light	Bronze	
FOR USE WITH 65-1542 & 65-1543			
65-1550	Trunnion Mount for 150-320 Watt Beam Selectable Flood Light	Bronze	
65-1551	Direct Arm Mount for 100-320 Watt Beam Selectable	Bronze	
65-1552	Universal Mount for 100-320 Watt Beam Selectable	Bronze	
65-1553	Fixed Mount Bracket for Beam Selectable Fixtures	Bronze	

© Satco Products, Inc. All rights reserved. Rev. 10/26 SN1946

DIMENSIONS / WEIGHTS

Item	Length (A)	Width (B)	Height (C)	Weight
65-1540	7.80"	3.15"	8.80"	3.26 lbs
65-1541	9.76"	3.62"	9.74"	4.80 lbs
65-1542	12.51"	5.57"	14.22"	10.71 lbs
65-1543	16.35"	6.74"	17.00"	17.24 lbs.

65-1540 | 65-1541

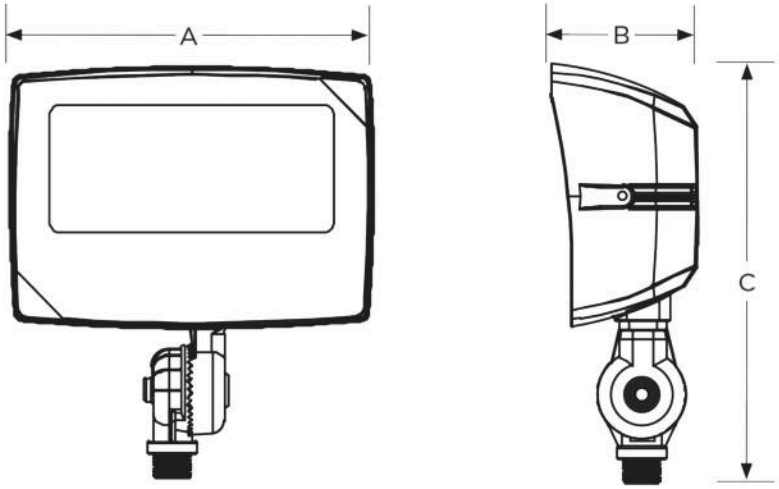

65-1542 | 65-1543

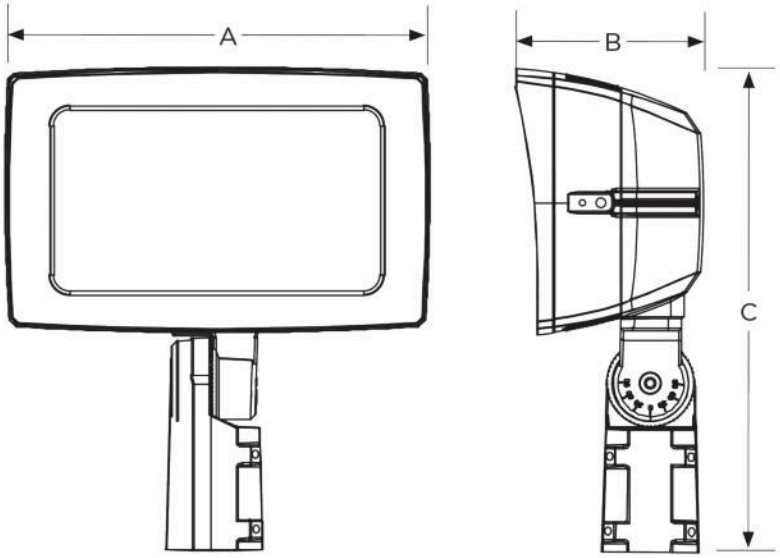

FEATURES



Beam Selectable Switch



CCT and Wattage Switches



IK07 Impact Resistant Lens



Integrated by-passable Photocell

This device complies with Part 15 of the FCC Rules. Operation is subject to the following two conditions: (1) this device may not cause harmful interference, and (2) this device must accept any interference received, including interference that may cause undesired operation.

WARNING: Some products included in this specification sheet may be subject to the warning requirements of California's Proposition 65. Please refer to your product packaging for more information.

Meets requirements of ICES-005 issue 5 class A for use in commercial applications.

Fixture may not be compatible with all dimmers. See satco.com for details.

Specifications are subject to change without prior notice.

Visit satco.com/service/warranty for complete warranty details.

Photometric reports for all configurations are available at satco.com.

SATCO.COM | 800-437-2826

© Satco Products, Inc. All rights reserved. Rev. 10/26 SN1946