SATCO | NUVO

LED LOW PROFILE WALL PACKS

FIELD SELECTABLE









WATTAGE & CCT SELECTABLE

EM MODELS AVAILABLE

LOW PROFILE DESIGN - EXTENDS LESS THAN 4.25"

INTEGRATED BY-PASSABLE PHOTOCELL

IK08 VANDAL RESISTANT GLASS LENS

SUGGESTED APPLICATIONS
Industrial, Commercial, Parking Garages, Hotels, Pathways, Warehouses

SATCO|NUVO's LED Low Profile Wall Packs offer field-selectable settings, allowing you to tailor the wattage and color temperature to your needs. The sleek low-profile design features a durable IK08 vandal resistant lens to ensure a clean look and long-lasting durability. Added features include 0-10V dimming, an IP65 rating, and an integrated photocell that can easily be bypassed with the convenient on/off switch. New EM integrated models are now available, offering up to 90 minutes of emergency runtime for added protection during power loss.

0-10V DIMMING | WET LOCATION | IP 65 | IK 08 | 50,000 HOURS | 5 YEAR WARRANTY | TRUSTED WARRANTY | DLC LISTED PREMIUM

SATCO | NUVO

LED LOW PROFILE WALL PACKS
FIELD SELECTABLE

GENERAL SPECIFICATIONS

Range Voltage, Frequency: 120V-277V, 50/60Hz
Power Factor, THD%: >0.9, <20%
Dimming: 0-10V Dimmable Down to 10%
Surge Protection Rating: 4kV
Integrated Photocell: Yes
CRI: 80
CCT: 3000K/4000K/5000K
Beam Angle: 90°
Functional Life: 50,000 Hours

Location Rating: Wet
IP Rating: IP65
Ambient Operating Temperature: -40°C (-40°F) to +50°C (+122°F)
Material: Die-Cast Aluminum
Finish: Bronze
Lens Material: Borosilicate Glass - IK08 Rated
EM Battery Runtime: 90 Minutes
EM Battery Chemistry: LiFePO4

ITEM SPECIFICATIONS / ORDER INFO

Item	Wattage	Lumens	Input Current @120V/277V	Efficacy	Bug Rating	DLC ID
65-884	30W/45W/60W	3,844-7,506	0.25-0.11/0.38-0.16/0.50-0.22A	Up to 128 LPW	B1-U3-G3	S-27Y08Z
65-885	70W/85W/100W	8,817-12,941	0.58-0.25/0.71-0.31/0.83-0.36A	Up to 129 LPW	B1-U3-G5	S-3MA72N
Integrated EM Models						
65-886	30W/45W/60W	3,844-7,506	0.25-0.11/0.38-0.16/0.50-0.22A	Up to 128 LPW	B1-U3-G3	S-58V3ZK
65-887	70W/85W/100W	8,817-12,941	0.58-0.25/0.71-0.31/0.83-0.36A	Up to 129 LPW	B1-U3-G5	S-5PBPY7

DIMENSIONS/WEIGHTS

A-Length	B-Height	C-Depth	Weight
15.55"	9.76"	4.21"	9.26 Lbs.

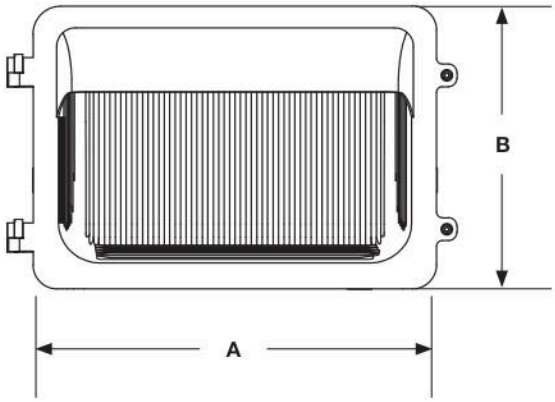

PHOTOMETRICS

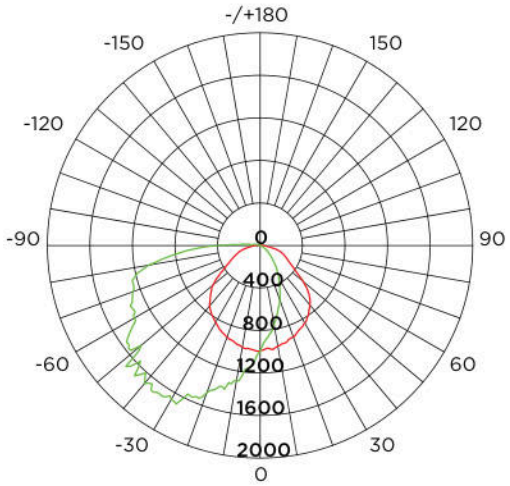

Beam Angle (90°)

This device complies with Part 15 of the FCC Rules. Operation is subject to the following two conditions: (1) this device may not cause harmful interference, and (2) this device must accept any interference received, including interference that may cause undesired operation.

Meets requirements of ICES-005 issue 5. Class A – for use in commercial, industrial, or business environments.

Fixture may not be compatible with all dimmers.

WARNING: Some products included in this specification sheet may be subject to the warning requirements of California's Proposition 65. Please refer to your product packaging for more information.

Specifications are subject to change without prior notice.

DLC Primary Use: Outdoor Non-Cutoff and Semi-Cutoff Wall-Mounted Area Luminaires.

© Satco Products, Inc. All rights reserved. 6/26 SN1264