SATCO | NUVO

ADJUSTABLE POST TOPS

FIELD SELECTABLE | 120V-347V





FIELD SELECT

FIELD SELECTABLE:
3 CCT & 3 WATTAGE

INTEGRATED BY-PASSABLE PHOTOTCELL

ARTICULATING & LOCKING HEAD

RANGE VOLTAGE 120V-347V

3" SLIP-FITTER MOUNT INCLUDED

BRONZE POWDER COATED FINISH

SUGGESTED APPLICATIONS

Parking Lots
Parks
Warehouses
Commercial Areas
Arenas
Walkways

PERFORMANCE WITH PURPOSE

The SATCO|NUVO Adjustable LED Post Top Fixtures bring together decorative style, durable construction, and versatile performance for pathways, campuses, parking areas, and many other outdoor communal spaces. Designed with a fully articulating head, these fixtures allow light to be directed where it is needed most for customized coverage and enhanced visual appeal. An integrated by-passable photocell adds convenient dusk-to-dawn operation, while selectable wattage and CCT options provide added flexibility. Finished with a protective powder-coated bronze housing and built to withstand the elements with IP65 wet-location protection and IK08 impact resistance, these fixtures deliver reliable long-lasting illumination for demanding exterior environments.

120-347V | 0-10V DIMMING | WET LOCATION | IP 65 | IK 08 | 6KV SURGE PROTECTION | DLC LISTED | 50,000 HOURS | 5 YEAR WARRANTY | TRUSTED NB WARRANTY

ADJUSTABLE POST TOPS
FIELD SELECTABLE | 120V-347V

GENERAL SPECIFICATIONS

Range Voltage: 120V-347V
Frequency: 50/60Hz
Power Factor: >0.9
THD: <20%
Dimmable: 0-10V Dimmable
Surge Protection: 6kV
Efficacy: Up to 145 LPW
CRI: 80+
CCT Selectable: 3000K/4000K/5000K
Beam Angle: 90°

Location Rating: Wet
IP Rating: IP65
IR Rating: IK08
Ambient Operating Temperature: -40°F to +113°F (-40°C to +45°C)
Housing Material: Die-Cast Aluminum
Lens Material: Polycarbonate (PC)
Finish: Bronze
Functional Life: 50,000 Hours
Warranty: 5 Years

ITEM SPECIFICATIONS / ORDER INFO

Item	Lumens	Wattage Selectable	Max. HID Replacement Wattage	Input Current	BUG Rating	DLC ID
65-895	10875-4375	75W/55W/35W	175W	0.63-0.22/0.46-0.41/0.29-0.10A	B3-U3-G1	S-41BG1L
65-896	21750-12500	150W/125W/100W	300W	1.25-0.43/1.04-0.36/0.83-0.29A	B4-U3-G1	S-KZ0WWW

DIMENSIONS / WEIGHTS

Item	Diameter (A)	Height (B)	Weight
65-895	17.89"	20.75"	10.56 Lbs.
65-896	20.89"	23.76"	14.74 Lbs.

*3" Fitter

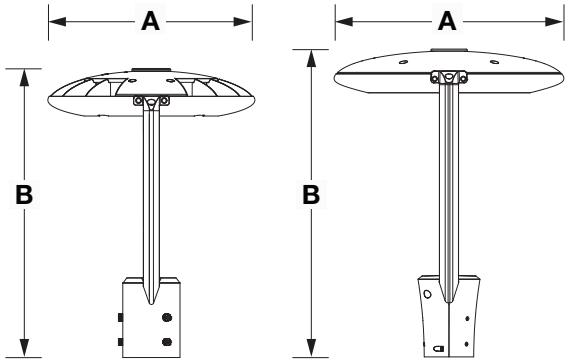

65-895 65-896

FEATURES

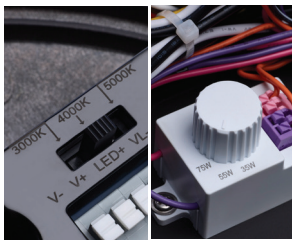

CCT and Wattage Switches


IK08 Impact Resistant Lens

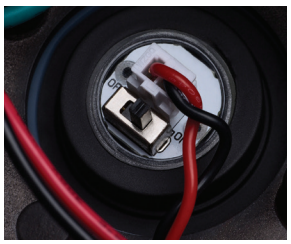
Integrated By-passable Photocell


Slip Fitter Mount


Articulating Head

May not be compatible with all dimmers. See satco.com for details
Specifications are subject to change without prior notice.
WARNING: This product can expose you to chemicals including Lead which is known to the State of California to cause cancer, or birth defects, or other reproductive harm. For more information, go to http://www.P65Warnings.ca.gov.
This device complies with Part 15 of the FCC Rules. Operation is subject to the following two conditions: (1) this device may not cause harmful interference, and (2) this device must accept any interference received, including interference that may cause undesired operation.
Meets requirements of ICES-005 issue 5 class A for use in commercial applications.
MIN 75°C SUPPLY CONDUCTORS
IMPORTANT: This product must be installed in accordance with the applicable installation code by a person familiar with the construction and operation of the product and the hazards involved.
CONSULT A QUALIFIED ELECTRICIAN TO ENSURE CORRECT BRANCH CIRCUIT CONDUCTOR.
Visit satco.com/service/warranty for complete warranty details.

SATCO.COM | 800-437-2826

© Satco Products, Inc. All rights reserved. 5/26 SN2028