SATCO | NUVO

LED EDGE-LIT EXIT SIGNS

CHICAGO APPROVED | RECESSED MOUNT





Shown in Ceiling Mount Configuration



Shown in Wall Mount Configuration

- **RED LETTERS ON WHITE BACKGROUND**
- **FROSTED ACRYLIC SINGLE FACE OR DOUBLE FACE**
- **CEILING OR WALL MOUNTING**
- **90-MINUTE BATTERY BACKUP RUNTIME**
- **TEST SWITCH AND AC SUPPLY INDICATOR**
- **SUGGESTED APPLICATIONS**
  Commercial & Industrial, Garages, Retail, Schools, Hospitals

SATCO|NUVO's LED RECESSED EDGE-LIT EXIT SIGNS provide a clean, low-profile solution for Chicago code-compliant emergency egress lighting. Designed for recessed wall or ceiling installation, these fixtures blend seamlessly into finished spaces while delivering highly visible exit identification through an illuminated edge-lit acrylic panel with bold red 6-inch EXIT lettering. Each sign includes a Chicago-approved Single or Double Face configuration and can be easily customized with optional Single and Double Face directional arrow panel kits to accommodate a variety of installation requirements. Universal 120-277V operation, integrated battery backup with 90 minutes of emergency illumination, and a push-to-test button with AC power indicator provide dependable performance and simplified maintenance. UL 924 certified, rated for damp locations, and designed to meet Chicago code requirements, these recessed exit signs deliver dependable performance with a clean, integrated appearance.

RED LETTERING | 120-277V | DAMP LOCATION | 90 MIN RUNTIME | 2 YEAR WARRANTY

SATCO | NUVO

LED EDGE-LIT EXIT SIGNS
CHICAGO APPROVED | RECESSED MOUNT

GENERAL SPECIFICATIONS

Input Voltage: 120V-277V
Frequency: 50/60Hz
Power Factor: >0.4
THD: <130%
Emergency Backup: Yes
Emergency Duration / Run Time: 90 Minutes
Recharge Time: 24 Hours
Battery Push to Test Button: Yes
Battery Type: LiFePO4
Letter Height: 6"

Color: Red
Directional Arrow: Directional Panel Kits sold separately
Housing Construction / Finish: Steel / Gloss White
Lens Material / Finish: Acrylic / Frosted
Mounting Options: Recessed Ceiling / Wall
Location Rating: Damp
Ambient Operating Temperature: +41°F to +113°F (+5°C to +45°C)
Warranty: 2 Year

ITEM SPECIFICATIONS / ORDER INFO

Item	Product Code	Wattage	Input Current @120V/277V	Face Type
67-350	EXER/WH/U/BBS/CH	4W	0.03-0.01A	Single
67-351	EXER/WH/U/BBD/CH	4W	0.03-0.01A	Double

DIMENSIONS / WEIGHTS

Item	Width (A)	Height (B)	Depth (C)	Weight
67-350	17.24"	11.91"	4.37"	5.51 Lbs.
67-351	17.24"	11.91"	4.37"	5.51 Lbs.

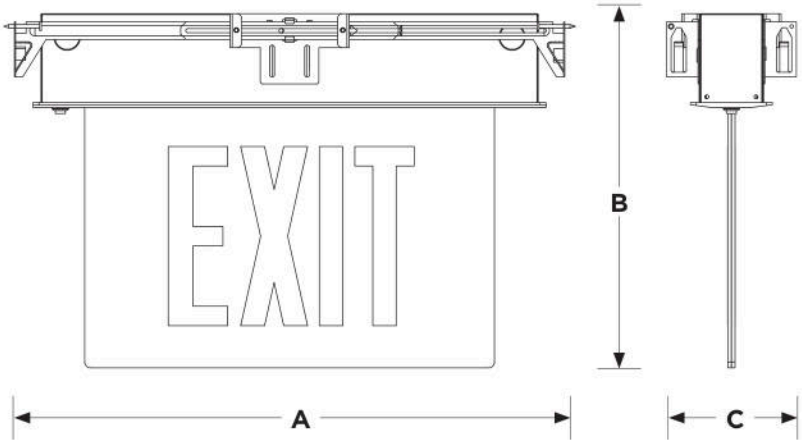

NOMENCLATURE

EXER/WH/U/BBX/CH
1 2 3 4 5 6

1-Product Family (EXER=Exit Sign Edgelit Recessed Mount)
2-Housing Color (WH=White)
3-Input Voltage (U=120-277V)
4-Battery Backup
5-Single or Double Face (S=Single, D=Double)
6-City of Code (CH=Chicago)

FEATURES



Red Lettering
Single Face or Double Faced


Test Switch & Power
Supply Indicator


Recessed Ceiling
or Wall Mount

© Satco Products, Inc. All rights reserved. Rev. 8/26 SN2106

OPTIONAL ACCESSORIES

Item	Compatible with ALL SKUS (67-350 to 67-351)	
67-360	Edge Lit Exit Sign Panel Accessory; White Single-Face Plastic Panel; Red EXIT Signage; No Arrows	
67-361	Edge Lit Exit Sign Panel Accessory; White Single-Face Plastic Panel; Red EXIT Signage; Right Direction Arrow	
67-362	Edge Lit Exit Sign Panel Accessory; White Single-Face Plastic Panel; Red EXIT Signage; Left Direction Arrow	
67-363	Edge Lit Exit Sign Panel Accessory; White Single-Face Plastic Panel; Red EXIT Signage; Double Direction Arrow	
67-364	Edge Lit Exit Sign Panel Accessory; White Single-Face Plastic Panel; Red STAIR Signage; No Arrows	
67-365	Edge Lit Exit Sign Panel Accessory; White Single-Face Plastic Panel; Red STAIR Signage; Right Direction Arrow	
67-366	Edge Lit Exit Sign Panel Accessory; White Single-Face Plastic Panel; Red STAIR Signage; Left Direction Arrow	
67-367	Edge Lit Exit Sign Panel Accessory; White Single-Face Plastic Panel; Red STAIR Signage; Double Direction Arrow	
67-370	Edge Lit Exit Sign Double-Sided Panel Accessory; White Double-Face Plastic Panel; Red EXIT Signage; No Arrows	
67-371	Edge Lit Exit Sign Double-Sided Panel Accessory; White Double-Face Plastic Panel; Red EXIT Signage; Right/Left Direction Arrows	
67-372	Edge Lit Exit Sign Double-Sided Panel Accessory; White Double-Face Plastic Panel; Red EXIT Signage; Double Direction Arrows	
67-373	Edge Lit Exit Sign Double-Sided Panel Accessory; White Double-Face Plastic Panel; Red STAIR Signage; No Arrows	
67-374	Edge Lit Exit Sign Double-Sided Panel Accessory; White Double-Face Plastic Panel; Red STAIR Signage; Right/Left Direction Arrows	
67-375	Edge Lit Exit Sign Double-Sided Panel Accessory; White Double-Face Plastic Panel; Red STAIR Signage; Double Direction Arrows	

This device complies with Part 15 of the FCC Rules. Operation is subject to the following two conditions: (1) this device may not cause harmful interference, and (2) this device must accept any interference received, including interference that may cause undesired operation.

Warning: This product can expose you to chemicals including lead, which is known to the State of California to cause cancer and birth defects or other reproductive harm. For more information go to www.P65Warnings.ca.gov

Meets requirements of ICES-005 issue 5 class B for use in residential and commercial applications.

Specifications are subject to change without prior notice.

Visit satco.com/service/warranty for complete warranty details.

© Satco Products, Inc. All rights reserved. Rev. 8/26 SN2106