SATCO | NUVO

TRACK HEAD LIGHTING

J & H STYLE | ORB SHAPE







J-Style



H-Style

ColorQuick®
Selectable Color Technology

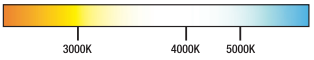

- 3 CCT SELECTABLE
- 90 CRI HIGH QUALITY LIGHT
- J-TRACK & H-TRACK COMPATIBLE MODELS
- 24° AND 36° BEAM SPREAD OPTIONS
- LOW-PROFILE ADAPTER WITH 355° ROTATION

SUGGESTED APPLICATIONS

Restaurants
Hospitality
Offices
Retail
Accent Lighting

SATCO|NUVO's LED Orb track heads are compact, modern fixtures designed to deliver adaptable, controlled illumination. These Orb-shaped heads feature a very contemporary design with a swivel arm and a 355° rotating head for precise aiming. Each track head includes a recessed CCT switch, allowing selection between 3000K, 4000K, and 5000K to accommodate varying lighting requirements, along with two beam spread options—24° and 36°—for targeted or wider light distribution. A low-profile track adapter, compatible with both H-track and J-track systems, maintains a clean, streamlined appearance. Available in white, black, and brushed nickel finishes, the Orb track head integrates seamlessly into contemporary interiors and is well suited for office, hospitality, and residential applications.



SATCO | NUVO

TRACK HEAD LIGHTING
J & H STYLE | ORB SHAPE

GENERAL SPECIFICATIONS

Input Voltage: 120V
Wattage: 12W
Replacement Wattage: 75W
Max Lumens: 1020
Input Current: 0.12A
Frequency: 60Hz
Power Factor: 0.9
THD: <40%
Efficacy: up to 85 LPW
CRI: 90

CCT Selectable: 3000K/4000K/5000K
Location Rating: Dry
Dimmable: Phase-Cut dimmable down to 10%
Ambient Operating Temperature: -20°C (-4°F) to +40°C (+104°F)
IP Rating: IP20
Construction: Aluminum
Lens Material: Poly methyl methacrylate (PMMA)
Functional Life: 50,000 Hours
Warranty: 3 Years

ITEM SPECIFICATIONS

Item Number	Finish	Beam Angle
	H-STYLE	
TH670	White	24°
TH671	Black	24°
TH672	Brushed Nickel	24°
TH673	White	36°
TH674	Black	36°
TH675	Brushed Nickel	36°
	J-STYLE	
JH5070	White	24°
JH5071	Black	24°
JH5072	Brushed Nickel	24°
JH5073	White	36°
JH5074	Black	36°
JH5075	Brushed Nickel	36°

This device complies with Part 15 of the FCC Rules. Operation is subject to the following two conditions: (1) this device may not cause harmful interference, and (2) this device must accept any interference received, including interference that may cause undesired operation.

WARNING: Some products included in this specification sheet may be subject to the warning requirements of California's Proposition 65. Please refer to your product packaging for more information.

Meets requirements of ICES-005 issue 5 class B for use in residential applications.

Fixture may not be compatible with all dimmers.

Replacement wattage shown depends on application and fixture.

Specifications are subject to change without prior notice.

Visit satco.com/service/warranty for complete warranty details.

© Satco Products, Inc. All rights reserved. 01/26 SN1940

DIMENSIONS/WEIGHTS

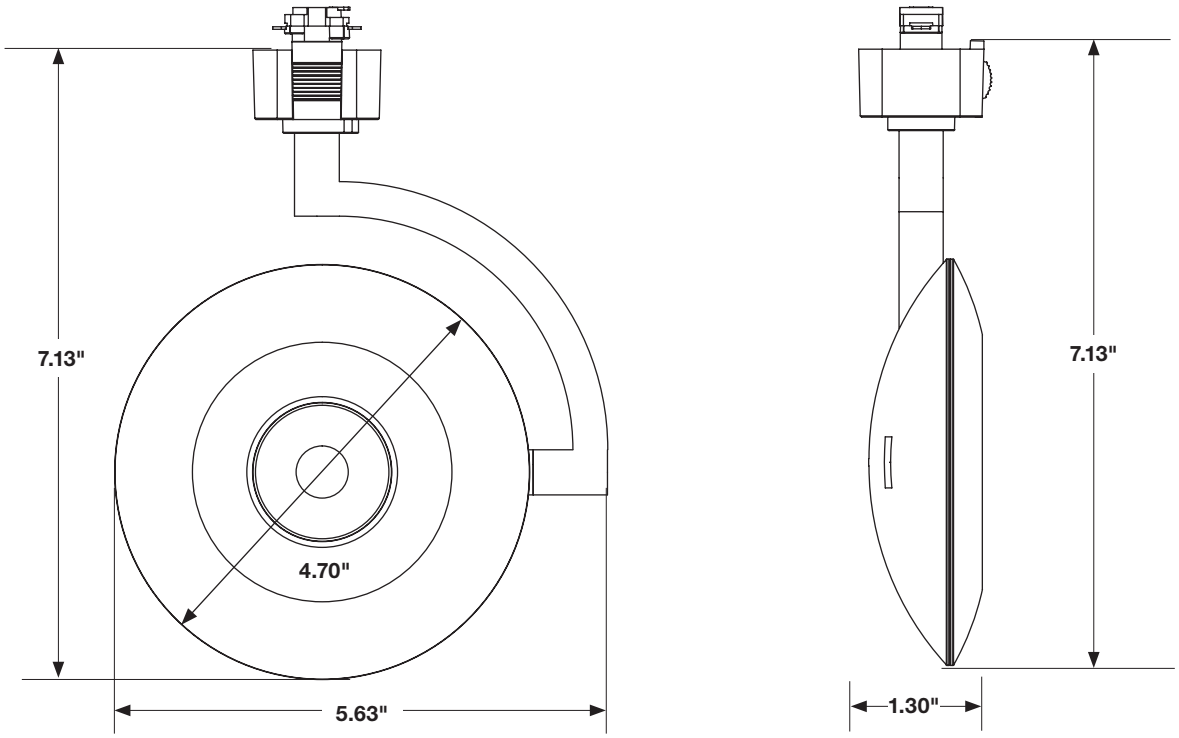

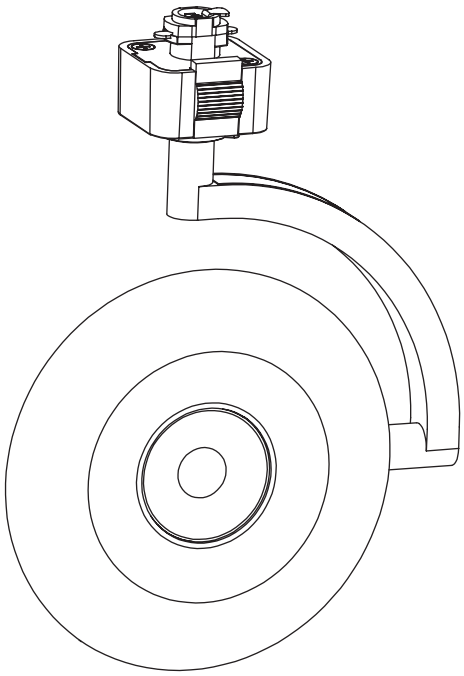

H-Style Orb 0.9 lbs.

© Satco Products, Inc. All rights reserved. 01/26 SN1940

DIMENSIONS/WEIGHTS

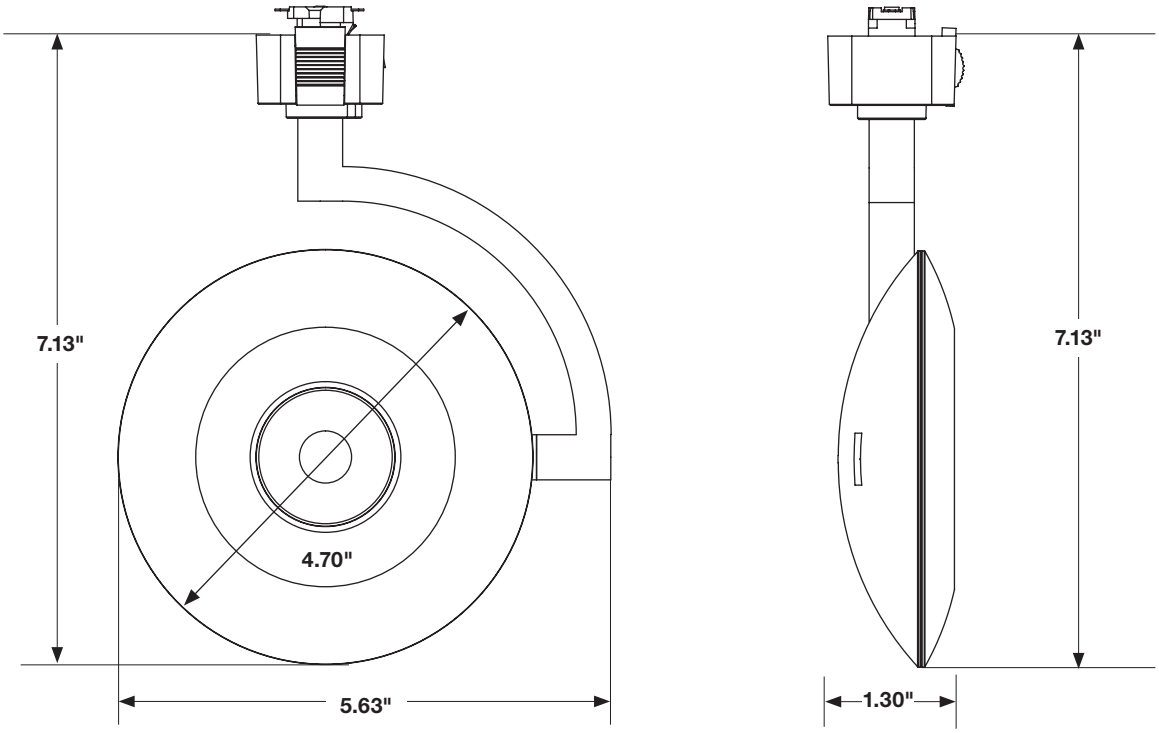

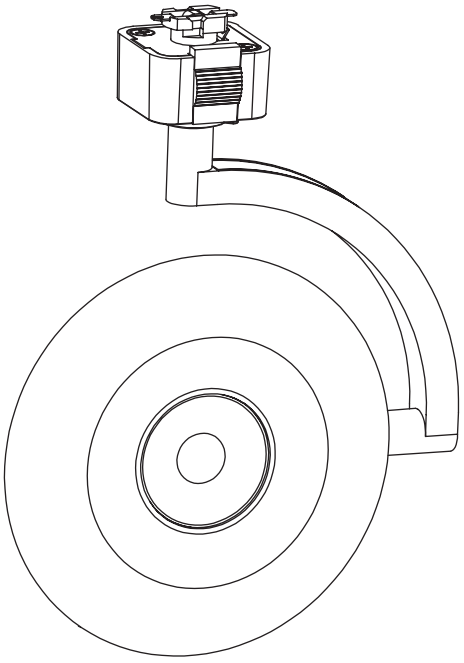

J-Style Orb 0.9 lbs.

© Satco Products, Inc. All rights reserved. 01/26 SN1940

AIMING GUIDE

L and **W** are the outer points where the candle power drops to 50% of the maximum.
LX and **FC** are center beam illuminance values. Data shown is for the 2700K setting.

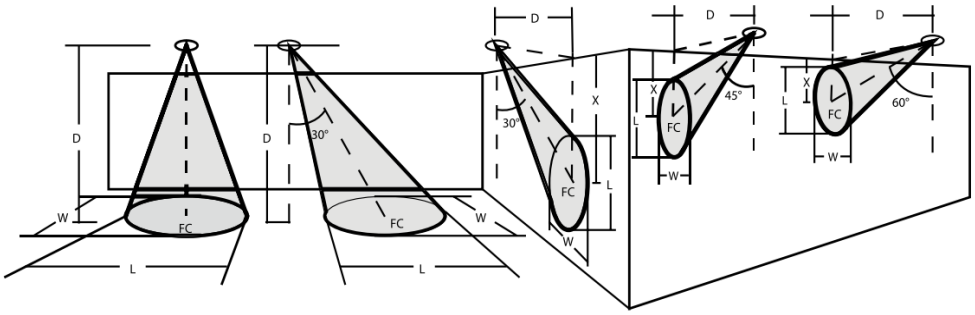

24° Beam Angle @3000K

Horizontal Aiming Angles — 0°

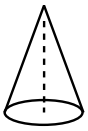

D	(ft)	LX	FC	L	W
6	6	714.62	66.39	2.55	2.55
8	8	389.55	36.19	3.40	3.40
10	10	252.63	23.47	4.25	4.25
12	12	172.11	15.99	5.10	5.10
14	14	125.29	11.64	5.95	5.95

Horizontal Aiming Angles — 30°

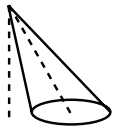

D	(ft)	LX	FC	X	L	W
6	6.93	461.99	42.92	3.56	2.94	2.55
8	9.24	258.12	23.98	4.62	3.93	3.40
10	11.55	158.88	14.76	5.77	4.91	4.25
12	13.86	114.53	10.64	6.93	5.89	5.10
14	16.17	82.667	7.68	8.08	6.87	5.95

Vertical Aiming Angles — 30°

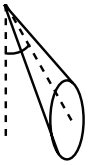

D	(ft)	LX	FC	X	L	W
3	6	368.23	34.21	5.20	3.45	2.95
4	8	203.01	18.86	6.93	4.60	3.93
5	10	129.17	12.00	8.66	5.75	4.91
6	12	87.19	8.10	10.39	6.91	5.89
7	14	64.15	5.96	12.12	8.06	6.87

Vertical Aiming Angles — 45°

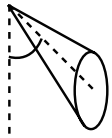

D	(ft)	LX	FC	X	L	W
3	4.24	950.02	88.26	3.00	2.55	1.80
4	5.66	525.17	48.79	4.00	3.41	2.41
5	7.07	331.85	30.83	5.00	4.26	3.01
6	8.49	237.77	22.09	6.00	5.11	3.61
7	9.90	172.76	16.05	7.00	5.96	4.21

Vertical Aiming Angles — 60°

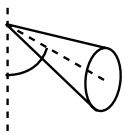

D	(ft)	LX	FC	X	L	W
3	3.46	1878.30	174.50	1.73	1.50	1.30
4	4.62	1133.01	105.26	2.31	2.01	1.74
5	5.77	697.29	64.78	2.89	2.51	2.17
6	6.93	472.10	43.86	3.46	3.01	2.61
7	8.08	340.79	31.66	4.04	3.52	3.04

36° Beam Angle @3000K

Horizontal Aiming Angles — 0°

D	(ft)	LX	FC	L	W
6	6.00	438.20	40.71	3.39	3.39
8	8.00	244.99	22.76	4.52	4.52
10	10.00	156.40	14.53	5.65	5.65
12	12.00	108.28	10.06	6.78	6.78
14	14.00	78.47	7.29	7.91	7.91

Horizontal Aiming Angles — 30°

D	(ft)	LX	FC	X	L	W
6	6.93	258.010683	23.97	3.56	4.52	3.96
8	9.24	139.392505	12.95	4.62	6.03	5.27
10	11.55	92.354262	8.58	5.77	7.53	6.59
12	13.86	62.968815	5.85	6.93	9.04	7.91
14	16.17	47.145882	4.38	8.08	10.55	9.23

Vertical Aiming Angles — 30°

D	(ft)	LX	FC	X	L	W
3	6.00	263.72	24.50	5.20	4.20	3.64
4	8.00	135.19	12.56	6.93	5.61	4.86
5	10.00	87.40	8.12	8.66	7.01	6.07
6	12.00	58.66	5.45	10.39	8.41	7.28
7	14.00	44.02	4.09	12.12	9.81	8.50

Vertical Aiming Angles — 45°

D	(ft)	LX	FC	X	L	W
3	4.24	597.50	55.51	3.00	3.69	2.50
4	5.66	310.22	28.82	4.00	4.76	3.34
5	7.07	208.28	19.35	5.00	6.15	4.17
6	8.49	137.99	12.82	6.00	7.38	5.01
7	9.90	100.75	9.36	7.00	8.61	5.84

Vertical Aiming Angles — 60°

D	(ft)	LX	FC	X	L	W
3	3.46	1062.50	98.71	1.73	2.33	1.99
4	4.62	630.12	58.54	2.31	3.10	2.65
5	5.77	377.38	35.06	2.89	3.88	3.31
6	6.93	264.58	24.58	3.46	4.65	3.97
7	8.08	192.24	17.86	4.04	5.43	4.64

© Satco Products, Inc. All rights reserved. 01/26 SN1940

TRACK ACCESSORIES

Item#	Description	Finish	Length	Width	Height	Cert.
TR118	2 Foot Track, 2 dead end caps, all mounting hardware	White	24″	1 5⁄16″	5⁄8″	Dry
TR119	2 Foot Track, 2 dead end caps, all mounting hardware	Black	24″	1 5⁄16″	5⁄8″	Dry
TR120	4 Foot Track, 2 dead end caps, all mounting hardware	White	48″	1 5⁄16″	5⁄8″	Dry
TR121	4 Foot Track, 2 dead end caps, all mounting hardware	Black	48″	1 5⁄16″	5⁄8″	Dry
TR122	8 Foot Track, 2 dead end caps, all mounting hardware	White	96″	1 5⁄16″	5⁄8″	Dry
TR123	8 Foot Track, 2 dead end caps, all mounting hardware	Black	96″	1 5⁄16″	5⁄8″	Dry
TR124	6 Foot Track, 2 dead end caps, all mounting hardware	White	72″	1 5⁄16″	5⁄8″	Dry
TR125	6 Foot Track, 2 dead end caps, all mounting hardware	Black	72″	1 5⁄16″	5⁄8″	Dry
TR126	2 Foot Track, 2 dead end caps, all mounting hardware	Brushed Nickel	24″	1 5⁄16″	5⁄8″	Dry
TR127	4 Foot Track, 2 dead end caps, all mounting hardware	Brushed Nickel	48″	1 5⁄16″	5⁄8″	Dry
TR128	6 Foot Track, 2 dead end caps, all mounting hardware	Brushed Nickel	72″	1 5⁄16″	5⁄8″	Dry
TR129	8 Foot Track, 2 dead end caps, all mounting hardware	Brushed Nickel	96″	1 5⁄16″	5⁄8″	Dry
TR131	2 Foot Track, 2 dead end caps, all mounting hardware	Russet Bronze	24″	1 5⁄16″	5⁄8″	Dry
TR132	4 Foot Track, 2 dead end caps, all mounting hardware	Russet Bronze	48″	1 5⁄16″	5⁄8″	Dry
TR133	6 Foot Track, 2 dead end caps, all mounting hardware	Russet Bronze	72″	1 5⁄16″	5⁄8″	Dry
TR134	8 Foot Track, 2 dead end caps, all mounting hardware	Russet Bronze	96″	1 5⁄16″	5⁄8″	Dry
TP185	Drop Ceiling T-Bar Clips, for attaching Track Lighting to Drop Ceilings; 4 pc.	Metal Plain	1 ½″	½″	7⁄8″	Dry

Tracks Includes two dead end caps and all mounting hardware.

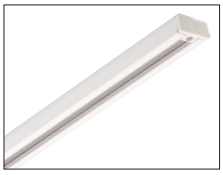
White

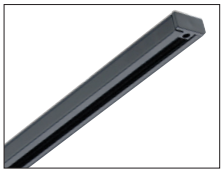
Black

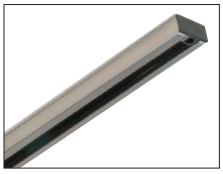
Brushed Nickel

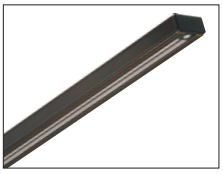
Russet Bronze


Used with 3 Conductor "H" type connector

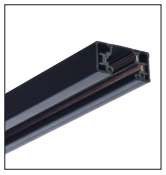
Track with end cap removed

CURRENT LIMITERS

Item	Amp	Finish
TL100	.5	White
TL101	1	White
TL102	2	White
TL103	3	White
TL104	5	White
TL105	8	White
TL106	12	White

Item	Amp	Finish
TL110	.5	Black
TL111	1	Black
TL112	2	Black
TL113	3	Black
TL114	5	Black
TL115	8	Black
TL116	12	Black



Extensions Lowers Track Heads to desired height

Item	Description	Size	Finish
TP159	Extension	18″	White
TP160	Extension	24″	White
TP161	Extension	36″	White
TP162	Extension	48″	White
TP163	Extension	18″	Black
TP164	Extension	24″	Black
TP165	Extension	36″	Black
TP166	Extension	48″	Black


24″ Pendant Suspension Kit
Kit Includes: canopy, stem, support and power feed

ACCESSORIES
TP178 White
TP179 Black


TP159 18″ Extension
Shown with PAR38 track head and 120V monopoint adapter

© Satco Products, Inc. All rights reserved. 01/26 SN1940

TRACK ACCESSORIES

PENDANT TRACK ADAPTERS SUPPORTS UP TO 10 LBS.



LOOP ADAPTER

Item	Finish
TP215	White
TP216	Black
TP217	Brown



TRACK ADAPTER

Item	Finish
TP231	White
TP232	Black
TP233	Brown



STEM-HUNG ADAPTER

Item	Finish
TP244	White
TP245	Black
TP246	Brown

MONOPOINT ADAPTERS



LOW VOLTAGE (12V)

Item	Finish
TP176	White
TP177	Black

CORD KIT



LINE VOLTAGE (120V)

Item	Finish
TP156	White
TP157	Black
TP201	Brown

CANOPIES & LIVE ENDS PROVIDING ELECTRICITY TO TRACKS IN VARIOUS FORMATS



FLOATING

Item	Finish
TP154	White
TP155	Black
TP202	Brown



CONDUIT LIVE END

Item	Finish
TP169	White
TP170	Black
TP203	Brown
TP269	White*
TP270	Black*

*Reverse Polarity



LIVE END & CANOPY

Item	Finish
TP152	White
TP153	Black
TP204	Brown

CONNECTORS CONNECTING TRACKS IN VARIOUS FORMATS | FITS "H" TYPE TRACK



STRAIGHT

Item	Finish
TP144	White
TP145	Black
TP205	Brown



"L" CONNECTOR (90° angles)

Item	Finish
TP146	White
TP147	Black
TP208	Brown
TP234	White*
TP235	Black*
TP236	Brown*

*Reverse Polarity



"T" CONNECTOR

Item	Finish
TP148	White
TP149	Black
TP207	Brown
TP237	Black*
TP238	White*
TP239	Brown*

*Reverse Polarity



"X" CONNECTOR

Item	Finish
TP150	White
TP151	Black
TP206	Brown

DROP CEILING T-BAR TRACK CLIPS



TP185

(4 pieces per package • 90-018 nut not included)

© Satco Products, Inc. All rights reserved. 01/26 SN1940

TRACK ACCESSORIES

Item	Description	Finish	Length	Width	Height	Cert.
TP240	Track Suspension Aircraft Cable; White Canopy	White	144″	-	-	Dry
TP241	Track Suspension Aircraft Cable; Black Canopy	Black	144″	-	-	Dry
TP242	Track Suspension Aircraft Cable; Brushed Nickel Canopy	Brushed Nickel	144″	-	-	Dry
TP247	Single Monopoint Adapter; Round; Black Finish	Black	4 ¾″	4 ¾″	1″	Dry
TP248	Single Monopoint Adapter; Round; White Finish	White	4 ¾″	4 ¾″	1″	Dry
TP249	Triple Monopoint Adapter; Round; Black Finish	Black	4 ¾″	4 ¾″	1″	Dry
TP250	Triple Monopoint Adapter; Round; White Finish	White	4 ¾″	4 ¾″	1″	Dry
TP251	Double Monopoint Adapter; Rectangular; Black Finish	Black	9 ¼″	4 ⅝″	1″	Dry
TP252	Double Monopoint Adapter; Rectangular; White Finish	White	9 ¼″	4 ⅝″	1″	Dry
TP253	Triple Monopoint Adapter; Rectangular; Black Finish	Black	14 ¾″	4 ⅝″	1″	Dry
TP254	Triple Monopoint Adapter; Rectangular; White Finish	White	14 ¾″	4 ⅝″	1″	Dry
TP255	Outlet Track Adapter; Black Finish	Black	1 7⁄16″	1 7⁄16″	2 ⅝″	Dry
TP256	Outlet Track Adapter; White Finish	White	1 7⁄16″	1 7⁄16″	2 ⅝″	Dry
TP257	Outlet Track Adapter; Brown Finish	Brown	1 7⁄16″	1 7⁄16″	2 ⅝″	Dry
TP258	Sloped Ceiling Track Adapter; Black Finish	Black	1 ⅜″	1 7⁄16″	4 ¾″	Dry
TP259	Sloped Ceiling Track Adapter; White Finish	White	1 ⅜″	1 7⁄16″	4 ¾″	Dry
TP260	Sloped Ceiling Track Adapter; Brown Finish	Brown	1 ⅜″	1 7⁄16″	4 ¾″	Dry
TP278	Adjustable Track Pendant Kit; White Canopy	White	4 ¾″	4 ¾″	40″	Dry
TP279	Adjustable Track Pendant Kit; Black Canopy	Black	4 ¾″	4 ¾″	40″	Dry
TP280	Adjustable Track Pendant Kit; Brushed Nickel	Brushed Nickel	4 ¾″	4 ¾″	40″	Dry

TRACK SUSPENSION AIRCRAFT CABLES & KITS



TP240



TP241



TP242



TP278



TP279



TP280

© Satco Products, Inc. All rights reserved. 01/26 SN1940

SINGLE MONOPOINT ADAPTERS | ROUND FITS "H" TYPE TRACK



TP247



TP248



TP249



TP250

DOUBLE MONOPOINT ADAPTERS | RECTANGULAR FITS "H" TYPE TRACK



TP252



TP251

TRIPLE MONOPOINT ADAPTERS | RECTANGULAR



TP254



TP253

OUTLET TRACK ADAPTERS



TP255



TP256



TP257

SLOPED CEILING TRACK ADAPTERS



TP258



TP259



TP260

© Satco Products, Inc. All rights reserved. 01/26 SN1940