SATCO | NUVO

SIDE MOUNT TRACK HEADS

H & J STYLE | FIELD SELECTABLE





TH6001
JH6001



TH6002
JH6002



- FIELD SELECTABLE
- HIGH LUMEN OUTPUT
- 90+ CRI
- H-TRACK AND J-TRACK MOUNTING

SUGGESTED APPLICATIONS

Retail Stores
Grocery Displays
Warehouse
Wall Wash

SATCO|NUVO's Side Mount Track Heads deliver high output LED illumination for high ceiling applications. These track heads are available with both H and J-Track mounting options and are field selectable – meaning wattage and color temperature can easily be selected or changed in the field. The driver is mounted on the side of the fixture, allowing for 355° rotation from side to side and 350° up and down. Side Mount track heads offer 50, 40, and 30W options with a 60° beam spread. Five color temperatures are available 2700, 3000, 3500, 4000, and 5000K which can be easily selected using the switch on the driver compartment.



SIDE MOUNT TRACK HEADS
H & J STYLE | FIELD SELECTABLE

GENERAL SPECIFICATIONS

Input Voltage: 120V
Wattage: 50/40/30W
Lumens: 6100/5100/3990*
Input Current: 0.430A
Frequency: 60Hz
Power Factor: >0.9
THD: <20%
Efficacy: 110 LPW
CRI: 90+
CCT Selectable: 2700/3000/3500/4000/5000K

Beam Angle: 60°
Dimmable: Yes
Location Rating: Dry
IP Rating: IP20
Ambient Operating Temperature: -4F to +113F (-20C to +45C)
Construction: Aluminum / Polycarbonate (PC)
Lens Material: Glass
Functional Life: 50,000 Hours
Warranty: 3 Year

*Lumen Values at 4000K

ITEM SPECIFICATIONS / ORDER INFO

Item Number	Finish	Beam Angle
H-STYLE		
TH6001	White	60°
TH6002	Black	60°
J-STYLE		
JH6001	White	60°
JH6002	Black	60°

FEATURES


Horizontal & Vertical Aiming



H & J-Style Mounting

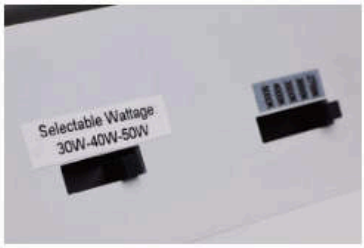

CCT & Wattage Switches


Improved Honeycomb Pattern for Passive Heat Dissipation

THIS DEVICE COMPLIES WITH PART 15 OF THE FCC RULES. OPERATION IS SUBJECT TO THE FOLLOWING TWO CONDITIONS: (1) THIS DEVICE MAY NOT CAUSE HARMFUL INTERFERENCE, AND (2) THIS DEVICE MUST ACCEPT ANY INTERFERENCE RECEIVED, INCLUDING INTERFERENCE THAT MAY CAUSE UNDESIRED OPERATION.

CAUTION: CHANGES OR MODIFICATIONS NOT EXPRESSLY APPROVED BY THE PARTY RESPONSIBLE FOR COMPLIANCE COULD VOID THE USER'S AUTHORITY TO OPERATE THE EQUIPMENT.

California Proposition 65 Warning: This product can expose you to chemicals including lead, which is known to the State of California to cause cancer and birth defects or other reproductive harm. For more information go to www.P65Warnings.ca.gov.

Meets requirements of ICES-005 issue 5 class B for use in residential applications.
CAUTION: RISK OF ELECTRIC SHOCK. DO NOT USE IF OUTER LAMP ENVELOPE IS DAMAGED OR BROKEN. DO NOT USE WHERE DIRECTLY EXPOSED TO WATER.

- NOT FOR USE WHERE DIRECTLY EXPOSED TO WATER.
- DIMMABLE.
- NOT COMPATIBLE WITH PHOTO CONTROLS, OCCUPANCY SENSORS, OR TIMERS.
- THIS DEVICE IS NOT INTENDED FOR USE WITH EMERGENCY EXITS OR EMERGENCY LIGHTING.
- OPERATING TEMPERATURE RANGE: -4°F TO +113°F (-20°C TO +45°C).

For complete listing of compatible dimmers, visit www.satco.com

© Satco Products, Inc. All rights reserved. Rev. 9/26 SN2136

DIMENSIONS / WEIGHTS

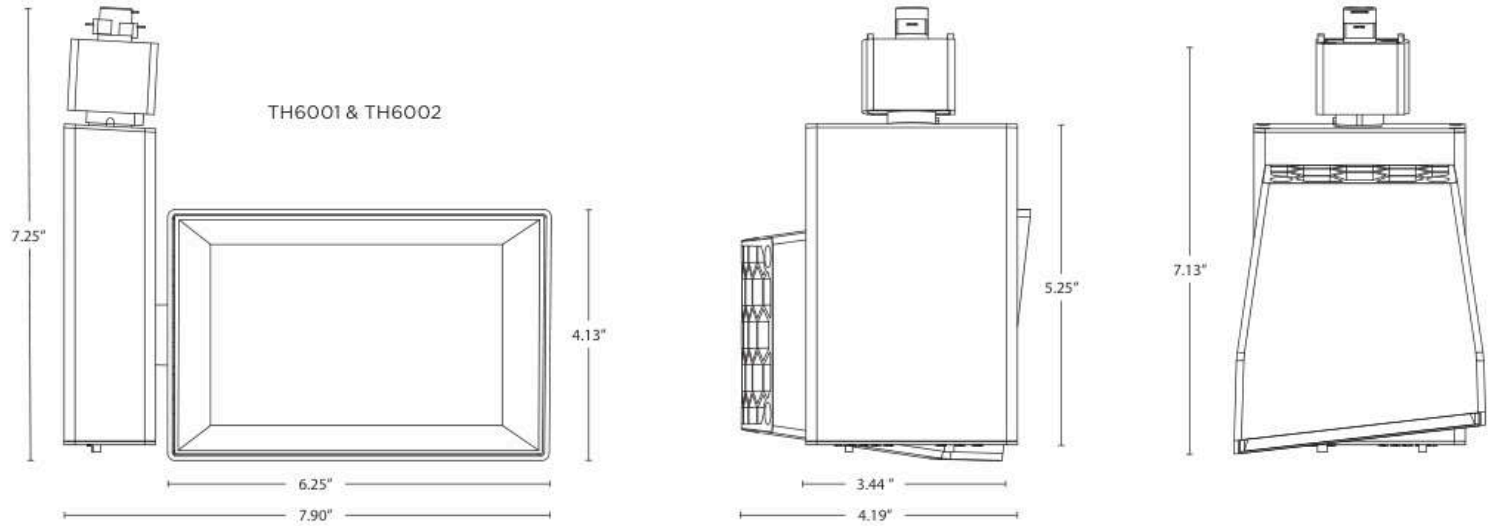

Weight: 2.74 Lbs

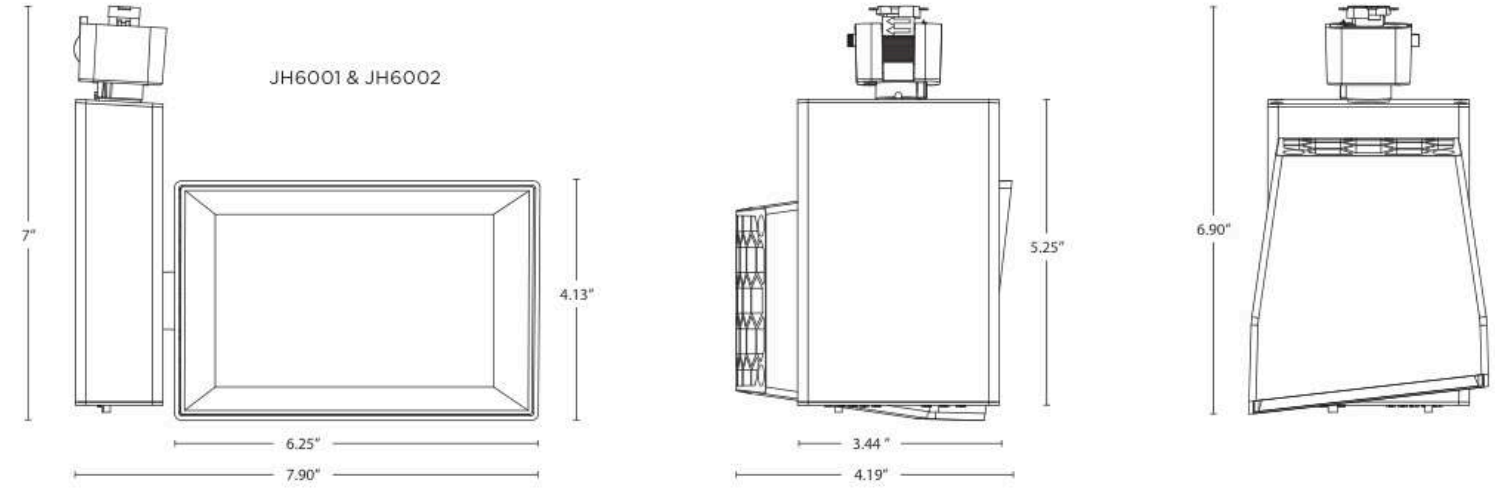

Weight: 2.74 Lbs

© Satco Products, Inc. All rights reserved. Rev. 9/26 SN2136

AIMING GUIDE

HIGH LUMEN SIDE MOUNT DRIVER SERIES — TH6001 / TH6002 / JH6001 / JH6002
L and W are the outer points where the candlepower drops to 50% of the maximum.
LX and FC are center-beam illuminance values. X is the horizontal offset of the beam center. Data shown is for the 3000K setting.
Data derived from independent LM-79 photometric (IES) testing.

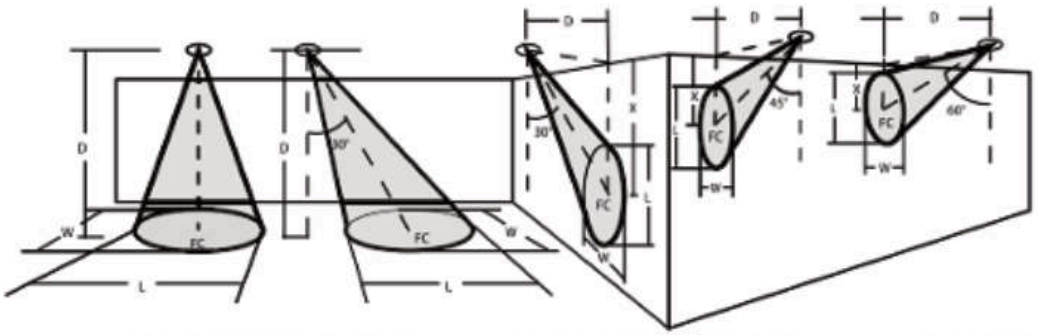

Horizontal Aiming Angles

0°

30W SETTING @3000K							40W SETTING @3000K							50W SETTING @3000K						
D	(ft)	LX	FC	L	W		D	(ft)	LX	FC	L	W		D	(ft)	LX	FC	L	W	
6	6.00	1051.42	97.68	8.03	6.18		6	6.00	1327.31	123.31	7.78	6.66		6	6.00	1591.18	147.83	7.91	5.66	
8	8.00	591.43	54.95	10.70	8.23		8	8.00	746.61	69.36	10.38	8.88		8	8.00	895.04	83.15	10.54	7.55	
10	10.00	378.51	35.17	13.38	10.29		10	10.00	477.83	44.39	12.97	11.10		10	10.00	572.82	53.22	13.18	9.44	
12	12.00	262.86	24.42	16.05	12.35		12	12.00	331.83	30.83	15.57	13.32		12	12.00	397.79	36.96	15.81	11.32	
14	14.00	193.12	17.94	18.73	14.41		14	14.00	243.79	22.65	18.16	15.53		14	14.00	292.26	27.15	18.45	13.21	

30°

D	(ft)	LX	FC	X	L	W		D	(ft)	LX	FC	X	L	W		D	(ft)	LX	FC	X	L	W	
6	6.93	682.92	63.45	3.46	9.27	6.18		6	6.93	862.11	80.09	3.46	8.99	6.66		6	6.93	1033.50	96.02	3.46	9.13	5.66	
8	9.24	384.14	35.69	4.62	12.36	8.23		8	9.24	484.94	45.05	4.62	11.99	8.88		8	9.24	581.34	54.01	4.62	12.17	7.55	
10	11.55	245.85	22.84	5.77	15.45	10.29		10	11.55	310.36	28.83	5.77	14.98	11.10		10	11.55	372.06	34.57	5.77	15.22	9.44	
12	13.86	170.73	15.86	6.93	18.53	12.35		12	13.86	215.53	20.02	6.93	17.98	13.32		12	13.86	258.37	24.00	6.93	18.26	11.32	
14	16.17	125.43	11.65	8.08	21.62	14.41		14	16.17	158.35	14.71	8.08	20.97	15.53		14	16.17	189.83	17.64	8.08	21.30	13.21	

Vertical Aiming Angles

30°

D	(ft)	LX	FC	X	L	W		D	(ft)	LX	FC	X	L	W		D	(ft)	LX	FC	X	L	W	
3	6.00	525.71	48.84	5.20	8.03	6.18		3	6.00	663.65	61.66	5.20	7.78	6.66		3	6.00	795.59	73.91	5.20	7.91	5.66	
4	8.00	295.71	27.47	6.93	10.70	8.23		4	8.00	373.31	34.68	6.93	10.38	8.88		4	8.00	447.52	41.58	6.93	10.54	7.55	
5	10.00	189.26	17.58	8.66	13.38	10.29		5	10.00	238.92	22.20	8.66	12.97	11.10		5	10.00	286.41	26.61	8.66	13.18	9.44	
6	12.00	131.43	12.21	10.39	16.05	12.35		6	12.00	165.91	15.41	10.39	15.57	13.32		6	12.00	198.90	18.48	10.39	15.81	11.32	
7	14.00	96.56	8.97	12.12	18.73	14.41		7	14.00	121.90	11.32	12.12	18.16	15.53		7	14.00	146.13	13.58	12.12	18.45	13.21	

45°

D	(ft)	LX	FC	X	L	W		D	(ft)	LX	FC	X	L	W		D	(ft)	LX	FC	X	L	W	
3	4.24	1486.94	138.14	3.00	5.67	4.37		3	4.24	1877.10	174.39	3.00	5.50	4.71		3	4.24	2250.26	209.06	3.00	5.59	4.00	
4	5.66	836.40	77.70	4.00	7.57	5.82		4	5.66	1055.87	98.09	4.00	7.34	6.28		4	5.66	1265.77	117.59	4.00	7.45	5.34	
5	7.07	535.30	49.73	5.00	9.46	7.28		5	7.07	675.76	62.78	5.00	9.17	7.85		5	7.07	810.09	75.26	5.00	9.32	6.67	
6	8.49	371.73	34.54	6.00	11.35	8.73		6	8.49	469.27	43.60	6.00	11.01	9.42		6	8.49	562.57	52.26	6.00	11.18	8.01	
7	9.90	273.11	25.37	7.00	13.24	10.19		7	9.90	344.77	32.03	7.00	12.84	10.98		7	9.90	413.31	38.40	7.00	13.04	9.34	

60°

D	(ft)	LX	FC	X	L	W		D	(ft)	LX	FC	X	L	W		D	(ft)	LX	FC	X	L	W	
3	3.46	2731.68	253.78	1.73	4.63	3.57		3	3.46	3448.45	320.37	1.73	4.49	3.84		3	3.46	4133.99	384.06	1.73	4.56	3.27	
4	4.62	1536.57	142.75	2.31	6.18	4.75		4	4.62	1939.75	180.21	2.31	5.99	5.13		4	4.62	2325.37	216.03	2.31	6.09	4.36	
5	5.77	983.41	91.36	2.89	7.72	5.94		5	5.77	1241.44	115.33	2.89	7.49	6.41		5	5.77	1488.24	138.26	2.89	7.61	5.45	
6	6.93	682.92	63.45	3.46	9.27	7.13		6	6.93	862.11	80.09	3.46	8.99	7.69		6	6.93	1033.50	96.02	3.46	9.13	6.54	
7	8.08	501.74	46.61	4.04	10.81	8.32		7	8.08	633.39	58.84	4.04	10.49	8.97		7	8.08	759.31	70.54	4.04	10.65	7.63	

IES-verified at 3000K (TH6002/JH6002): 30W 67.5° × 54.5° | 40W 65.9° × 58.0° | 50W 66.8° × 50.5°. LX includes inverse-square loss and target-plane cosine correction; FC = LX ÷ 10.7639.

SATCO | TH6001 · TH6002 · JH6001 · JH6002 | Contact your Satco sales representative for pricing & availability | satco.com

© Satco Products, Inc. All rights reserved. Rev. 9/26 SN2136

OPTIONAL ACCESSORIES

Item	Description	Finish	Length	Width	Height	Certification
TR118	2 Foot Track, 2 dead end caps, all mounting hardware	White	24"	1 5/16"	5/8"	Dry
TR119	2 Foot Track, 2 dead end caps, all mounting hardware	Black	24"	1 5/16"	5/8"	Dry
TR120	4 Foot Track, 2 dead end caps, all mounting hardware	White	48"	1 5/16"	5/8"	Dry
TR121	4 Foot Track, 2 dead end caps, all mounting hardware	Black	48"	1 5/16"	5/8"	Dry
TR122	8 Foot Track, 2 dead end caps, all mounting hardware	White	96"	1 5/16"	5/8"	Dry
TR123	8 Foot Track, 2 dead end caps, all mounting hardware	Black	96"	1 5/16"	5/8"	Dry
TR124	6 Foot Track, 2 dead end caps, all mounting hardware	White	72"	1 5/16"	5/8"	Dry
TR125	6 Foot Track, 2 dead end caps, all mounting hardware	Black	72"	1 5/16"	5/8"	Dry
TR126	2 Foot Track, 2 dead end caps, all mounting hardware	Brushed Nickel	24"	1 5/16"	5/8"	Dry
TR127	4 Foot Track, 2 dead end caps, all mounting hardware	Brushed Nickel	48"	1 5/16"	5/8"	Dry
TR128	6 Foot Track, 2 dead end caps, all mounting hardware	Brushed Nickel	72"	1 5/16"	5/8"	Dry
TR129	8 Foot Track, 2 dead end caps, all mounting hardware	Brushed Nickel	96"	1 5/16"	5/8"	Dry
TR131	2 Foot Track, 2 dead end caps, all mounting hardware	Russet Bronze	24"	1 5/16"	5/8"	Dry
TR132	4 Foot Track, 2 dead end caps, all mounting hardware	Russet Bronze	48"	1 5/16"	5/8"	Dry
TR133	6 Foot Track, 2 dead end caps, all mounting hardware	Russet Bronze	72"	1 5/16"	5/8"	Dry
TR134	8 Foot Track, 2 dead end caps, all mounting hardware	Russet Bronze	96"	1 5/16"	5/8"	Dry
TP185	Drop Ceiling T-Bar Clips, for attaching Track Lighting to Drop Ceilings; 4 pc.	Metal Plain	1 1/2"	1/2"	7/8"	Dry

Tracks Includes two dead end caps and all mounting hardware.


White


Black


Brushed Nickel


Russet Bronze


Used with 3 Conductor "H" type connector


Track with end cap removed

Item	Description	Finish	Length	Width	Height	Certification
TP247	Single Monopoint Adapter; Round	Black	4 3/4"	4 3/4"	1"	Dry
TP248	Single Monopoint Adapter; Round	White	4 3/4"	4 3/4"	1"	Dry


TP247


TP248

© Satco Products, Inc. All rights reserved. Rev. 9/26 SN2136