LED TEMPORARY WORK LIGHTS

PORTABLE LIGHTING & MOUNTING SOLUTIONS





S13097
Work Light with
Adustable Tripod



S13096
Compact Work Light



S13098
Adjustable Tripod

- **SUPER BRIGHT DIRECTIONAL LIGHT OUTPUT**
- **PORTABLE AND LIGHTWEIGHT**
- **BUILT FOR JOBSITE DURABILITY**
- **HEIGHT ADJUSTABLE TRIPOD**
- **IP65 RATED FOR WET LOCATIONS**
- **TAA COMPLIANT**

SUGGESTED APPLICATIONS
Temporary Lighting
Warehouses
Construction Job Sites
Workshops

SATCO|NUVO Portable LED Work Lights provide bright, dependable illumination for temporary work areas, maintenance, construction, and other indoor or outdoor applications. Lightweight and portable, the foldable work light offers easy transport and storage, while the tripod model provides adjustable-height illumination for broader area coverage. A standalone universal tripod is also available for use with select SATCO|NUVO Hi-Pro and temporary work lights, providing a versatile mounting option for changing jobsite needs.

120 VOLT | WET LOCATION | IP 65 | 50,000 HOURS | 5 YEAR WARRANTY | TAA COMPLIANT | TRUSTED NB WARRANTY

LED TEMPORARY WORK LIGHTS
PORTABLE LIGHTING & MOUNTING SOLUTIONS

WORK LIGHT GENERAL SPECIFICATIONS

Input Voltage: 120V
Frequency: 50/60Hz
Dimming: Non-Dimmable
Surge Protection Rating: 2kV
Efficacy: Up to 142 LPW
CRI: 80+
CCT: 5000K
Location Rating: Wet

IP Rating: IP65
Ambient Operating Temperature: -40°F to +104°F (-40°C to +40°C)
Housing Material: Die-Cast Aluminum
Lens Material/Finish: Glass/Clear
Tripod Material: Steel
Power Cord: 6' SJTW
Functional Life: 50,000 Hours
Warranty: 5 Year Work Lights; 1 Year Tripod

ITEM SPECIFICATIONS / ORDER INFO

Work Light & Work Light with Tripod

Item#	Description	Finish	Wattage	Lumens	Input Current @120V	Tripod Compatible
S13096	Compact LED Work Light	Yellow	35W	5000	0.50A	No
S13097	LED Work Light with Tripod	Yellow	50W	6500	0.80A	Yes

Tripod Only

Item#	Adjustable Height Range	Finish	Material	Weight Capacity	Mounting Options
S13098*	5 Foot Tripod	Yellow	Steel	11.00 Lbs	M8 or M10 Thread Size Bolts

*COMPATIBLE WITH SELECT SATCO|NUVO HI-PRO & TEMPORARY WORK LIGHTS

S13170, S13171, S13172, S13175, S38939, S38946, S38975

FEATURES

S13096

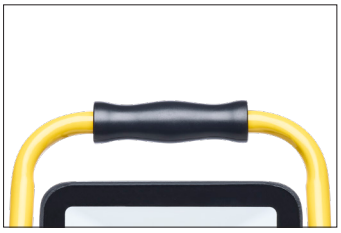
Portable Handle


Collapsible For Storage


6' SJTW Cord


Heatsink for Thermal Management

S13097


Versatile Mounting Options


Adjustable Light Source


Tripod Included


Heatsink for Thermal Management

S13098


Adjustable Base for Stability


Collapsible For Storage


Includes M8 & M10 Threaded Mounting Bolts


Conveniently Stores Mounting Accessories

© Satco Products, Inc. All rights reserved. 8/26 SN2135

DIMENSIONS / WEIGHTS

Item#	Length (A)	Width (B)	Height (C)	Overall Height (D)	Tripod Width (E)	Tripod Height (F)	Weight
S13096	9.57"	6.69"	9.25"	–	–	–	2.60 Lbs
S13097	10.63"	7.25"	10.75"	70.90"	34.90"	61.02"	8.40 Lbs
S13098	–	–	-	–	34.90"	61.02"	4.61 Lbs

S13096

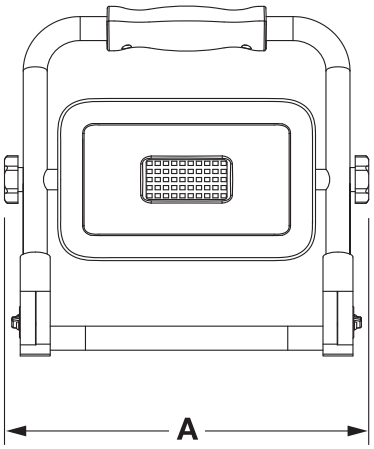

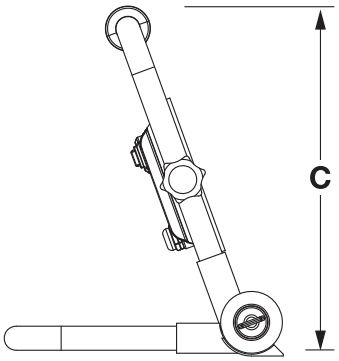

S13097

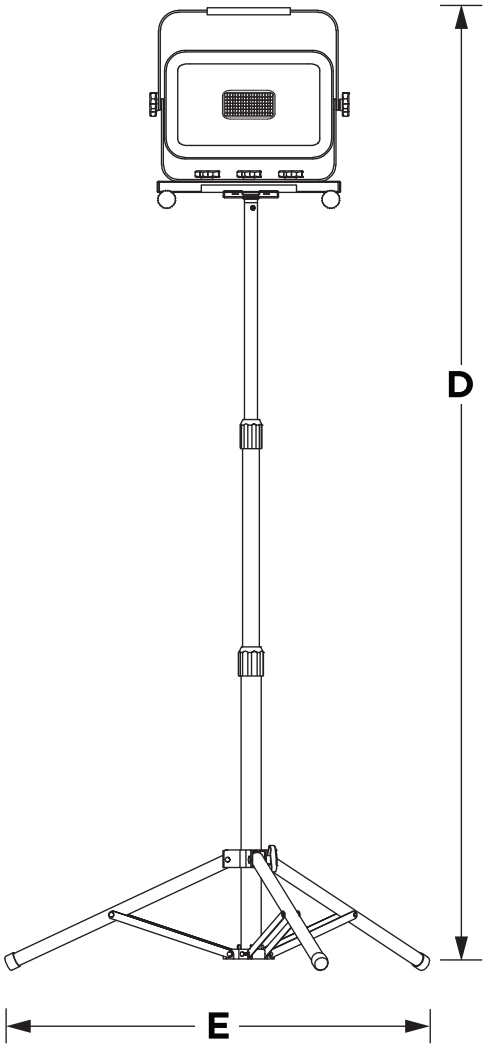

S13098

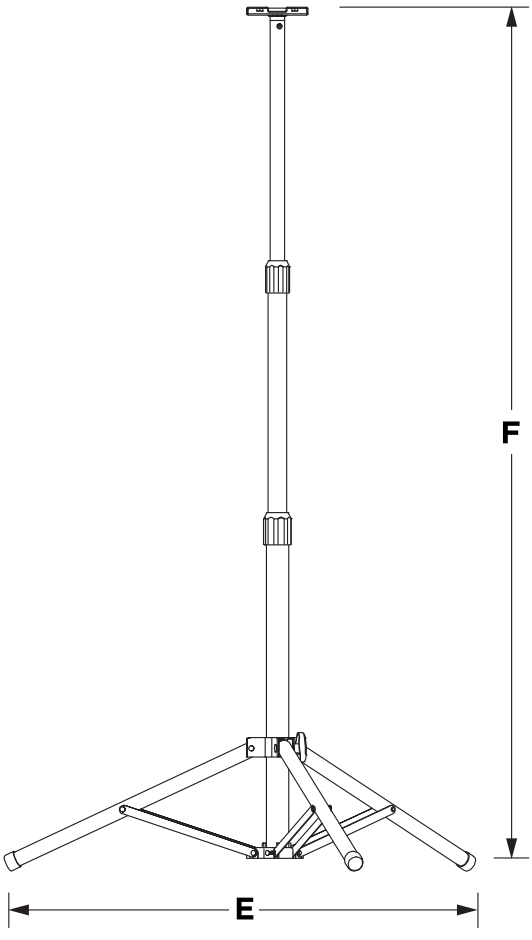

Specifications are subject to change without prior notice.
CAUTION: Risk of electrical shock
Meets requirements of ICES-005 issue 5 class B for use in residential and commercial applications.
WARNING: This product can expose you to chemicals including Lead which is known to the State of California to cause cancer, or birth defects, or other reproductive harm. For more information, go to http://www.P65Warnings.ca.gov.
This device complies with Part 15 of the FCC Rules. Operation is subject to the following two conditions:
(1) this device may not cause harmful interference, and
(2) this device must accept any interference received, including interference that may cause undesired operation.
Visit satco.com/service/warranty for complete warranty details.

© Satco Products, Inc. All rights reserved. 8/26 SN2135