SATCO | NUVO

MULTI-BEAM TEMPORARY WORK LIGHT

120V | REMOTE INCLUDED





BEAM ADJUSTABLE FROM 180° - 360°

10 FOOT PLUG-IN POWER CORD

LINKABLE UNITS

PORTABLE, VERSATILE

SUGGESTED APPLICATIONS

Temporary Lighting
Warehouses
Construction Job Sites
Workshops
Home/Garage
Tool Shed

SATCO|NUVO's Multi-Beam Temporary Work Light offers powerful, flexible illumination in a sleek new design. This 120V fixture features selectable wattages from 30W to 120W, producing up to 19,820 lumens at 5000K. Dual light panels expand from 10° to 360°, with adjustable beam angles of 180°, 280°, or 360° to direct light where needed. It includes a 10-foot power cord and integrated outlet for linking up to eight fixtures. A removable T-handle allows quick accessory changes, and a safety cable mounting kit is included for secure installation. The remote control offers on/off and dimming functionality. Built from durable plastic and aluminum with a clear polycarbonate lens and high-visibility gloss red finish, this fixture supports multiple setup configurations for maximum versatility.

120 VOLT | ADJUSTABLE BEAM | DAMP LOCATION | 4KV SURGE PROTECTION | 50,000 HOURS | 5 YEAR WARRANTY | TRUSTED NLB WARRANTY

MULTI-BEAM TEMPORARY WORK LIGHT
120V | REMOTE INCLUDED

GENERAL SPECIFICATIONS

Input Voltage: 120V
Frequency: 50/60Hz
Power Factor: >0.9
THD: <20%
Dimmable: Step Dimming with Remote
Surge Protection Rating: 4kV
Efficacy: Up to 179 LPW
CRI: 80+

Location Rating: Damp
IP Rating: IP64
Ambient Operating Temperature: -40°C (-40°F) to +40°C (+104°F)
Material: Plastic/Aluminum
Lens Material/Finish: Polycarbonate/Clear
Included Accessories: Safety Cable Mount Kit; Remote Control
Functional Life: 50,000 Hours
Warranty: 5 Years

ITEM SPECIFICATIONS / ORDER INFO

Item	Wattage Selectable	Max. Replacement Wattage	Max. Lumens	Input Current	CCT	Beam Angle	Connectible Units @120V
S13175	30W/70W/100W/120W	400W	19,820	0.25/0.58/0.83/1.00A	5000K	Adjustable 180°/280°/360°	8

INCLUDED ACCESSORY

Item	Description	
S13176	Remote For S13175	

DIMENSIONS / WEIGHTS

Item	Width Closed (A)	Width Open (B)	Height (C)	Weight
S13175	5.07"	12.72"	12.58"	6.60 Lbs.

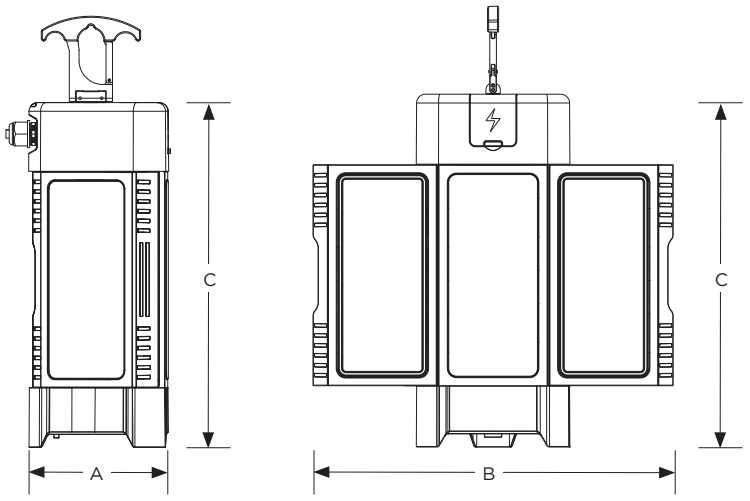

Closed Open

FEATURES


10 Foot Power Cord


Integrated Outlet


Removable T-Handle


Expandable Light Panels

This device complies with Part 15 of the FCC Rules. Operation is subject to the following two conditions: (1) this device may not cause harmful interference, and (2) this device must accept any interference received, including interference that may cause undesired operation.

WARNING: Some products included in this specification sheet may be subject to the warning requirements of California's Proposition 65. Please refer to your product packaging for more information.

Meets requirements of ICES-005 issue 5 class A for use in commercial applications.

Replacement wattage shown depends on application and fixture.

Specifications are subject to change without prior notice.

CAUTION - Risk of electric shock.

Visit satco.com/service/warranty for complete warranty details.

SATCO.COM | 800-437-2826

© Satco Products, Inc. All rights reserved. Rev. 9/25 SN1852