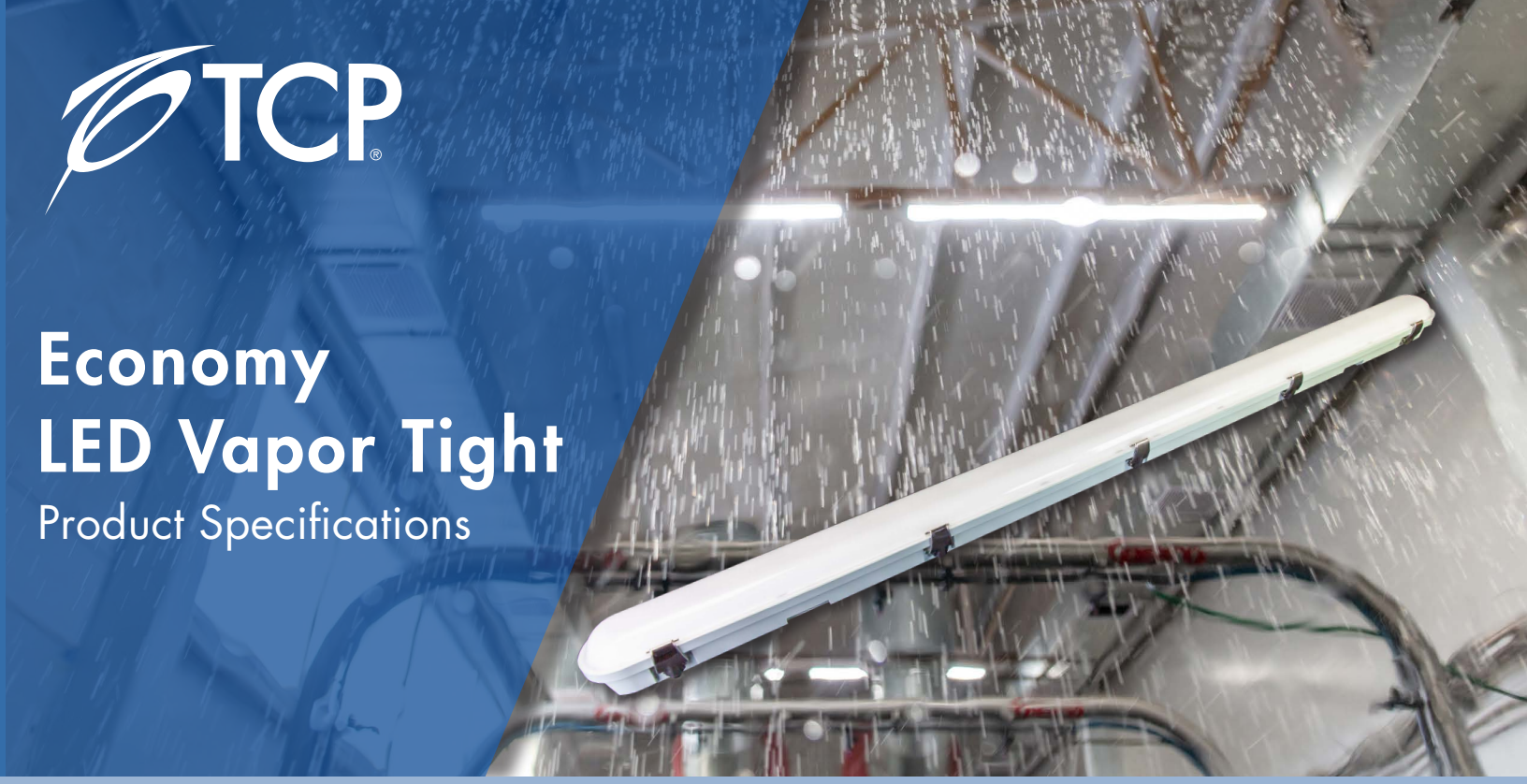

Economy LED Vapor Tight

Product Specifications

The TCP Economy LED Vapor Tight Luminaire is perfect for your wet location low bay needs. Providing ample light at a low energy cost, the Economy LED Vapor Tight is ready for the worst weather. With a plastic housing and included mounting hardware, the TCP Economy LED Vapor Tight is durable and quick to install.

Reasons to choose the Economy LED Vapor Tight from TCP

- Durable plastic housing
- Frosted PC lens for glare control
- Wet location rated
- Long-life: 50,000 hours
- Operating temperature: -4°F to 122°F
- Wide beam spread

Ideal Applications

- Parking Garages
- Car Washes
- Cold Storage
- Garden Centers
- Corridors
- Stairwells
- Hallways

TCP®
325 Campus Dr. | Aurora, Ohio 44202 | P: 800-324-1496 | tcpi.com

Not all versions of this product are qualified on the DLC QPL. To view our DLC qualified products, please consult the DLC Qualified Products List at www.designlights.org/qpl.

WET LOCATION

c UL US LISTED

5 YEAR WARRANTY

Economy LED Vapor Tight

Specifications

Input Line Voltage ..... 120-277 VAC
Input Line Frequency (Hz) 50/60Hz
Lumens
SW4 Package:
4 ft 4000/5000/5800L
Wattage
SW4 Package:
4 ft 32/40/46W
Lumens per Watt (LPW) ..... >130 LPW
Color Temperature (CCT) ..... 35/40/50K Selectable
Controls ..... Occupancy sensor w/ daylight harvesting (optional)
Dimming ..... 0-10V (standard)
Rated Life ..... >50,000 hours
Operating Temperature ..... 20°C to 50°C
CRI ..... 80+
Power Factor ..... >0.9
THD ..... <20%

Item Number	
Notes	Type

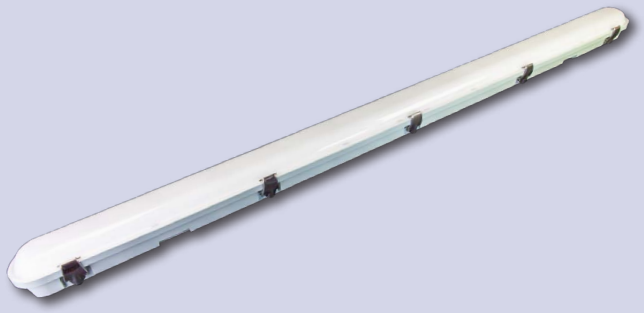

Listings
UL and cUL listed
RoHS Compliant
IP65
DLC 5.1 Standard

Warranty
Five year limited warranty against defects in manufacturing.

Features

- Durable lens and housing
- -20°C (-4°F) to 50°C (122°F) operating range
- Stainless steel clips allow for easy lens removal

Catalog Ordering Matrix

Example: VTF2UZDSW2CCT

FAMILY	SIZE	VOLTAGE	DIMMING	LUMEN PACKAGE[1]	WATTAGE[2]	COLOR TEMPERATURE
EVT – Economy Vapor Tight	**4** – 4 feet	**U** – 120V-277V	**ZD** – 0-10V Dimming	**SW4** – 4200/5200/6000L	32/40/46W	**CCT** – 35K/40K/50K Selectable Color

[1] Approximate lumen output. Actual performance may vary based on CCT, options selected and end user application.
[2] Actual wattage may differ by +/- 10%.

TCP®
325 Campus Dr. | Aurora, Ohio 44202 | P: 800-324-1496 | tcpi.com

Not all versions of this product are qualified on the DLC QPL. To view our DLC qualified products, please consult the DLC Qualified Products List at www.designlights.org/qpl.

WET LOCATION

c UL US LISTED

5 YEAR WARRANTY

Economy LED Vapor Tight

Dimensions

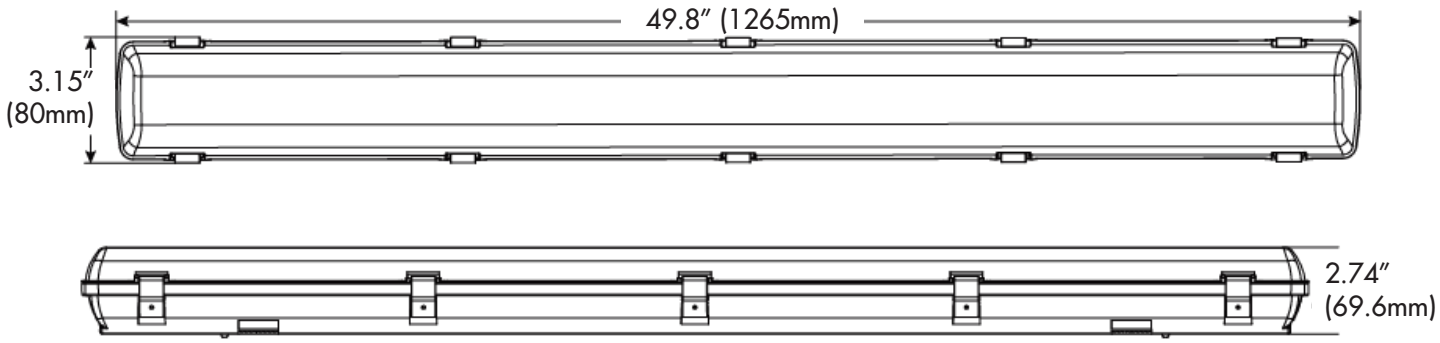

TCP®
325 Campus Dr. | Aurora, Ohio 44202 | P: 800-324-1496 | tcpi.com

Not all versions of this product are qualified on the DLC QPL. To view our DLC qualified products, please consult the DLC Qualified Products List at www.designlights.org/qpl.

WET LOCATION

c UL us LISTED

5 YEAR WARRANTY

Economy LED Vapor Tight

Photometric Report

Based on photometric data for
TCP Item # EVT4UZDSW4CCT

Polar Graph

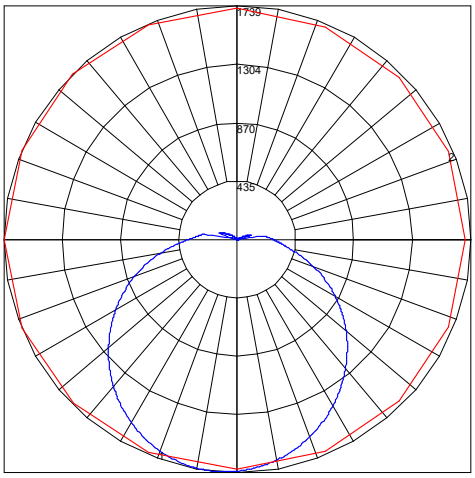

Maximum Candela = 1739.3 Located At Horizontal Angle = 157.5, Vertical Angle = 5.5
1 - Vertical Plane Through Horizontal Angles (157.5 - 337.5) (Through Max. Cd.)
2 - Horizontal Cone Through Vertical Angle (5.5) (Through Max. Cd.)

Characteristics

Luminaire Lumens	5898
Total Luminaire Efficiency	100 %
Luminaire Efficacy Rating (LER)	125
Total Luminaire Watts	47.0183
Ballast Factor	1.00
CIE Type	Direct
Spacing Criterion (0-180)	1.24
Spacing Criterion (90-270)	1.30
Spacing Criterion (Diagonal)	1.42
Basic Luminous Shape	Point

Coefficients of Utilization – Zonal Cavity Method

Effective Floor Cavity Reflectance 0.20

RC	80				70				50			30			10			0
RW	70	50	30	10	70	50	30	10	50	30	10	50	30	10	50	30	10	0
0	118	118	118	118	115	115	115	1156	109	109	109	103	103	103	98	98	98	96
1	106	100	96	91	103	98	93	89	93	89	86	88	85	82	84	81	79	76
2	96	87	79	73	93	84	77	72	80	74	69	76	71	67	72	68	65	62
3	87	75	67	60	84	74	65	59	70	63	57	66	61	56	63	58	54	52
4	79	67	57	50	77	65	56	49	62	54	48	59	52	47	56	51	46	44
5	73	59	50	43	70	58	49	42	55	47	41	53	46	41	50	44	40	37
6	67	53	44	37	65	52	43	37	50	42	36	48	41	35	46	39	35	33
7	62	48	38	33	60	47	38	32	45	37	32	43	36	31	41	35	31	29
8	58	44	35	29	56	43	35	32	41	34	28	40	33	28	38	32	27	25
9	54	40	32	26	52	39	31	26	38	31	25	36	30	25	35	29	25	23
10	50	37	29	23	49	36	29	22	35	28	23	34	27	23	33	27	22	21

Zonal Lumen Summary

Zone	Lumens	%Lamp	%Fixt
0-20	634.82	10.80	10.80
0-30	1355.86	23.00	23.00
0-40	2240.56	38.00	38.00
0-60	4078.61	69.20	69.20
0-80	5343.76	90.60	90.60
0-90	5644.65	95.70	95.70
10-90	5480.89	92.90	92.90
20-40	1605.74	27.20	27.20
20-50	2549.72	43.20	43.20
40-70	2581.80	43.80	43.80
60-80	1265.15	21.50	21.50
70-80	521.40	8.80	8.80
80-90	300.89	5.10	5.10
90-110	192.87	3.30	3.30
90-120	232.16	3.90	3.90
90-130	245.79	4.20	4.20
90-150	251.76	4.30	4.30
90-180	253.24	4.30	4.30
110-180	60.37	1.00	1.00
0-180	5897.9	100.00	100.00

Total Luminaire Efficiency = 100.00%

TCP®
325 Campus Dr. | Aurora, Ohio 44202 | P: 800-324-1496 | tcpi.com
©TCP JAN 2025/WF553600

Not all versions of this product are qualified on the DLC QPL. To view our DLC qualified products, please consult the DLC Qualified Products List at www.designlights.org/qpl.

WET LOCATION

c UL US LISTED

5 YEAR WARRANTY

TECHNOLOGY CAST IN A BEAUTIFUL LIGHT

For over 30 years, TCP has been designing, developing and delivering energy-efficient lighting into the market. Thanks to our cutting-edge technology and manufacturing expertise, we have shipped billions of high quality lighting products. With TCP, you can count on a lighting product that is designed to meet the needs of the market - that transforms your surroundings and envelopes you in warmth - lighting that generates beauty with every flip of the switch.

Sales:	Catalog Number:
Date:	Type:
Model:	Notes:
Project:	
Rep:	

TCP® we know light.™

For more information on the quality and care TCP can deliver, call us at 800.324.1496 or visit tcpi.com

325 Campus Dr. | Aurora, Ohio 44202 | P: 800.324.1496 | F: 877.487.0516