TPG7 | Acorn Post Top Light

Specifications

Model	YR-TPG7-W100-Pn-MTCP
LED Chip	SMD 3030, Lumileds or Other LED Chips
Wattage	60W- 80W- 100W Power Selectable
CCT	3000K / 4000K / 5000K 3CCT Selectable
Light Output	Max 11000lm
Efficacy	110LM/W (Can customize higher LM/W if needed)
AC Input Voltage	120~277V / 277-480V
Light Distribution	Type V
Exclusive Feature(1)	Button Photocell Sensor Available
Exclusive Feature(2)	Acrylic Diffuser / PC Diffuser Optional
Exclusive Feature(3)	3CCT / Power Tunable Available
Ambient Temperature	-40°C to +45°C(-40°F to +113°F)
Total Harmonic Distortion (THD)	＜20%
Lifetime	50,000H
IP Rating	IP65
Warranty	5 years

Features

CCT Select

Power Select

Photocell sensor

ADC12 Die casting

Button Photocell Sensor (Optional)

CCT Select & Power Select

Dimension

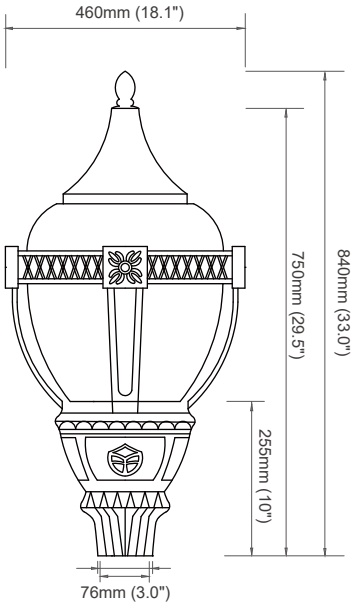

YR-TPG7-W100-Pn-MTCP

Applications

Street / Walkway

Community

Light Distribution

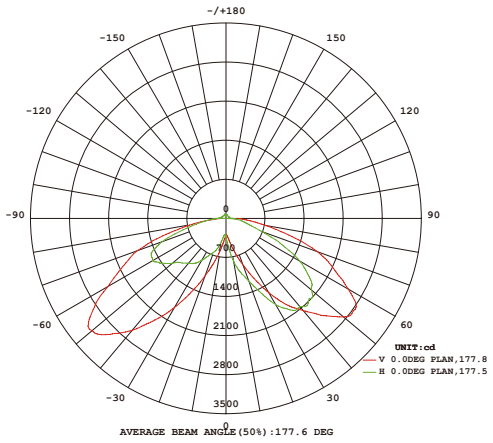

Installation

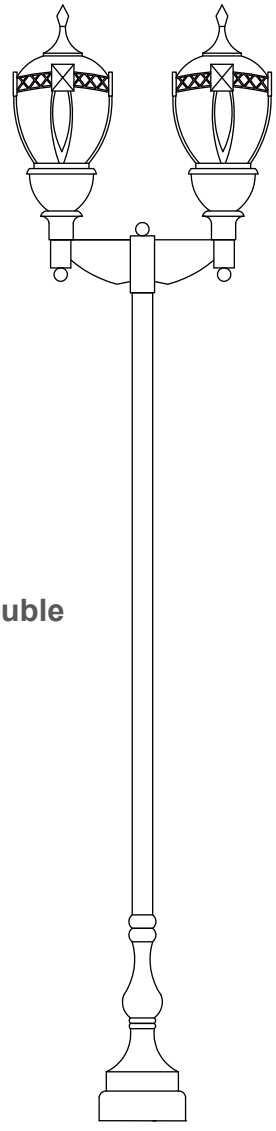

Double

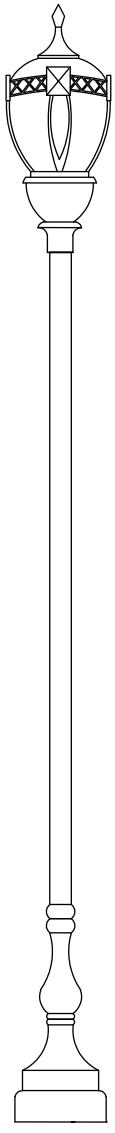

Single

Packaging information

Wattage	Product Dimension (mm/in)	Carton Box Dimension (mm/in)	N.W (Kg/lb) (1pc)	G.W (Kg/lb) (1ctn)	qty/ctn
YR-TPG7-W100-Pn-MTCP	460 x 460 x 840 mm 18.10 x 18.10 x 33.00 in	530 x 530 x 680 mm 20.86 x 20.86x 26.77 in	7Kg(15.4lbs)	9.0Kg(19.80lbs)	1 PCS
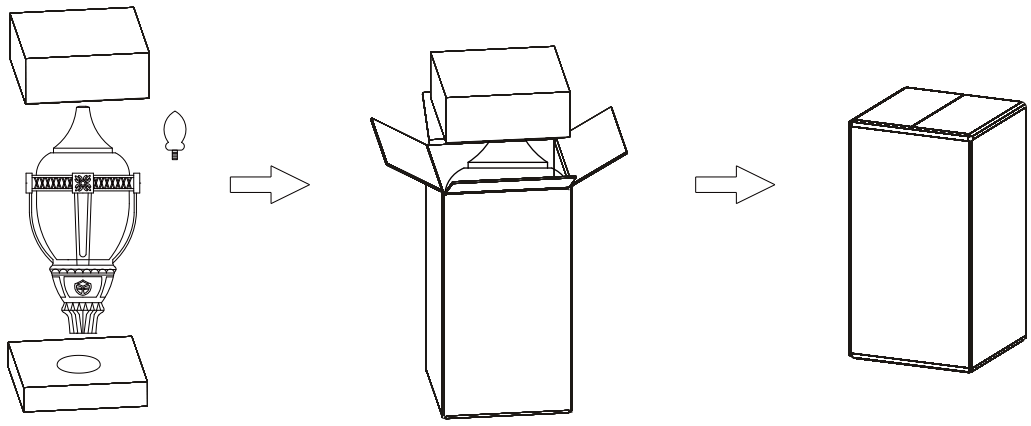
Carton Box