100-347Vac

8W/15W/20W

c UL us LISTED E530386

EMERGENCY LED DRIVER



HIGH VOLTAGE OUTPUT
170VDC

CONSTANT POWER
EMERGENCY OUTPUT

Self Test

CAUTION: ① The Emergency LED driver must connect to 0-10V dimming wires(DIM+,DIM-) of the fixture if the LED luminaire power exceeds the emergency LED driver power.
② When dimming to minimum,the LED luminaire power must be less than emergency driver's power.
③ In emergency mode, double-click this test switch to turn off the current emergency stage.

Model No.	WSD-EML8W27-XX	WSD-EML15W27-XX	WSD-EML20W27-XX
Input Voltage	100-347Vac,50/60Hz	100-347Vac,50/60Hz	100-347Vac,50/60Hz
Input Current	0.1A max	0.1A max	0.1A max
Input Power	12W max	12W max	12W max
Output Voltage	170V DC	170V DC	170V DC
Output Power	8W	15W	20W
Application	≤80W(0-10V Dimmable Fixture) ≤8W LED Lamps without dimming function	≤100W(0-10V Dimmable Fixture) ≤15W LED Lamps without dimming function	≤150W(0-10V Dimmable Fixture) ≤20W LED Lamps without dimming function
Ambient Temperature	5°C~50°C	5°C~50°C	5°C~50°C
Battery	Li-ion battery-7.2V/2500mAH	Li-ion battery-14.8V/2500mAH	Li-ion battery-14.4V/3500mAH

Dimensions:

Case-12.99"×1.97"×0.93"(mounting center-12.48")

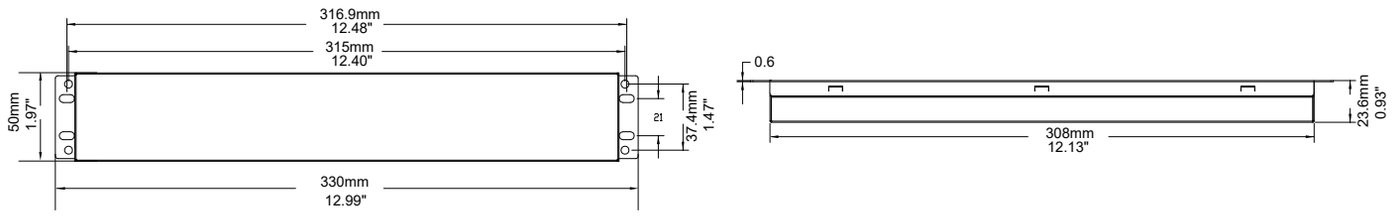

Test Plate:

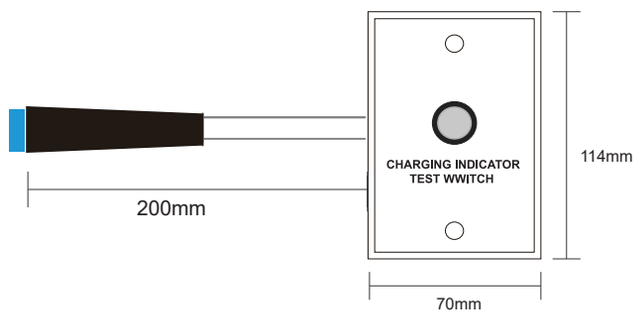

Skinny Test Button:

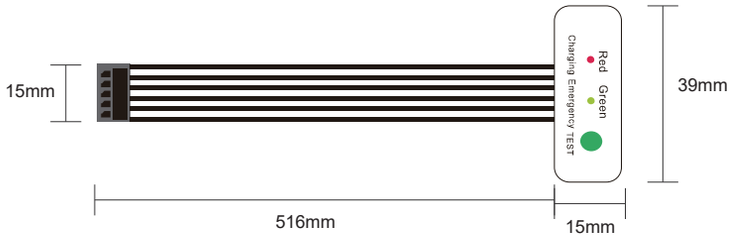

For ordering information, please contact sales@lightbulbsurplus.com

Wiring Diagram:

Wiring 1 : For LED Driver With Input Power Higher Than Emergency Output Power

0-10V Dimmable LED Driver + Dimmer Switch

Emergency Driver Dim+(Green) , Driver Dim-(Yellow) Have to connect with LED driver DIM+ and DIM-

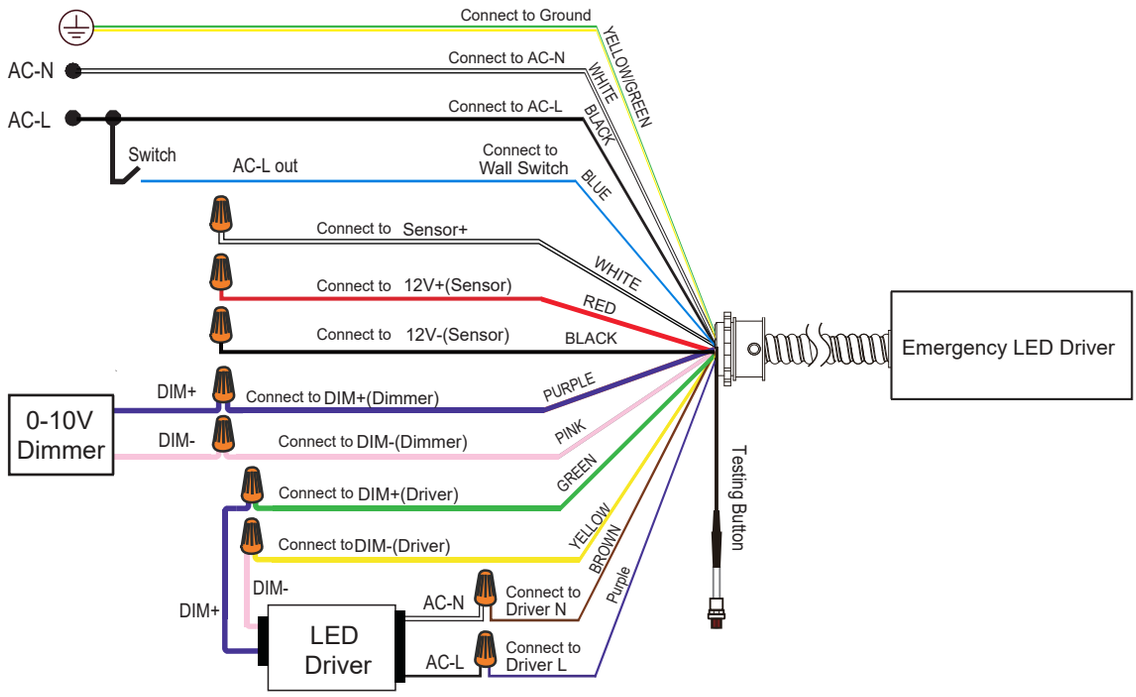

Wiring 2 : For LED Driver With Input Power Higher Than Emergency Output Power

0-10V Dimmable LED Driver + Wall Switch

Emergency Driver Dim+(Green) Driver Dim-(Yellow) Have to connect to LED driver DIM+ and DIM-,
If using 12Vdc sensor, the wires must connect to emergency LED driver's 12V sensor wires.

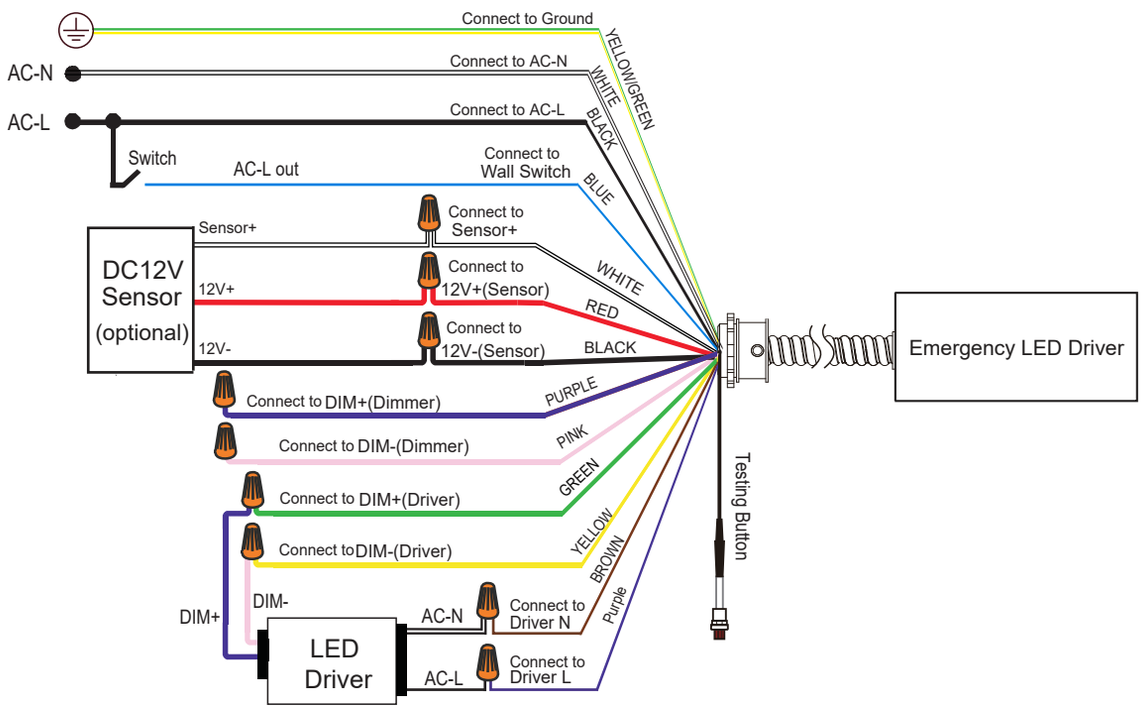

100-347Vac

8W/15W/20W

Wiring 3 : For LED Driver With Input Power Less Than Emergency Output Power

NON Dimmable LED Driver

If using 12Vdc sensor, the wires must connect to emergency LED driver's 12V sensor wires.

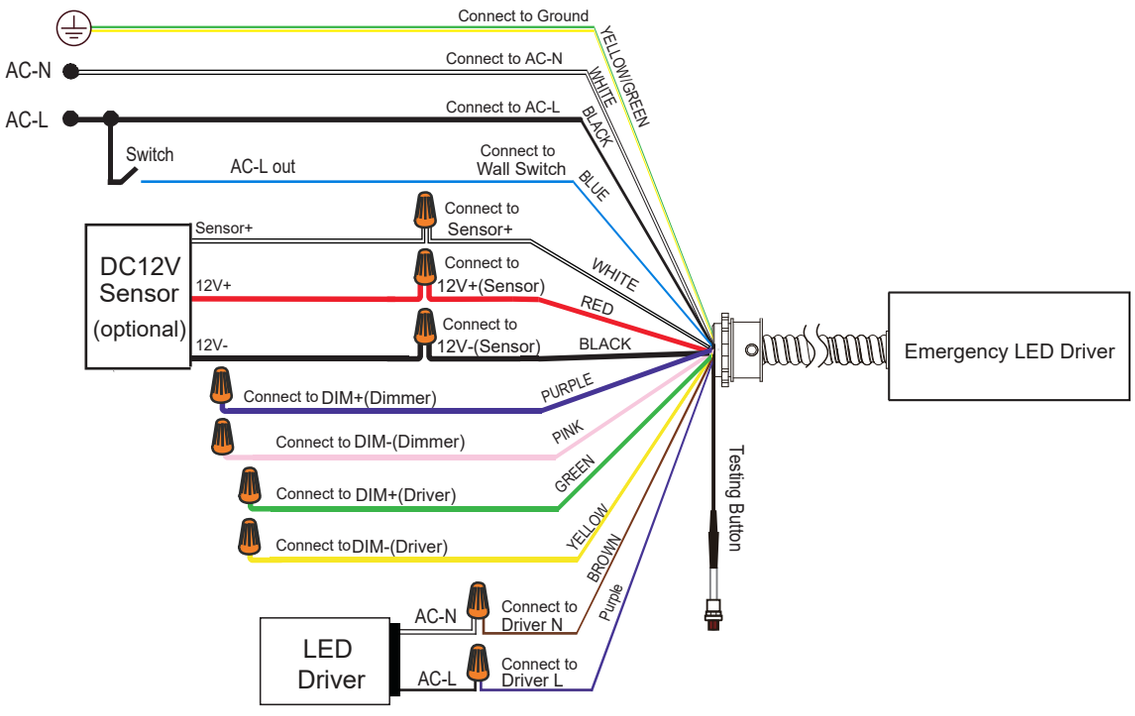

IMPORTANT SAFEGUARDS

When using electrical equipment, basic safety precautions should always be followed including the following

PLEASE READ AND FOLLOW ALL SAFETY INSTRUCTIONS.

CAUTION:RISK OF SHOCK-disconnect emergency and normal input power sources before servicing any equipment connected to this unit.

CAUTION: Risk of fire or electric shock-This emergency battery pack installation requires knowledge of luminaire and electrical systems.

CAUTION: Servicing of this equipment should be performed by qualified personnel only.

CAUTION: Before installation, make certain the AC power to fixture is off.

CAUTION: Verify that all replacement lamp types marked on the installed luminaire are also identified as suitable for use with this emergency battery pack.

CAUTION: Suitable for use in 5°C -50°C ambient temperatures. Max. mounting height: 27.2 ft.

IMPORTANT: An unswitched AC power source is required (100-347 VAC, 50/60 Hz). This device is designed for fixtures listed for dry and damp locations.

IMPORTANT: Please charge the battery consistently for >24 hours for the first time usage so as to activate the whole battery cells of discharging/charging duration.

IMPORTANT: Customers are advised to charge emergency LED drivers 24 hours every 6 months during storage,and which could be stocked for 1 year at most. If customers don't install and recharge for more than one year, the batteries may be damaged. This is not covered in the warranty, and we would charge for replacement.

IMPORTANT: Lighting fixture manufacturers, electricians, and end-users need to ensure product system compatibility test before using and final installation.

CAUTION: Do not use outdoors. Do not mount near gas or electric heaters.

CAUTION: Equipment should be mounted in locations and at heights where it will not be subjected to tampering by unauthorized personnel.

CAUTION: The use of accessory equipment is not recommended by the manufacturer may cause an unsafe condition.

CAUTION: The emergency battery pack is not for in an air-handling fixture.

CAUTION: Do not use this equipment for other than its intended use.