COLD PACK EMERGENCY LED DRIVER
WSD-EMS15W27-LT20

Extreme Temps(-20°C to +60°C)

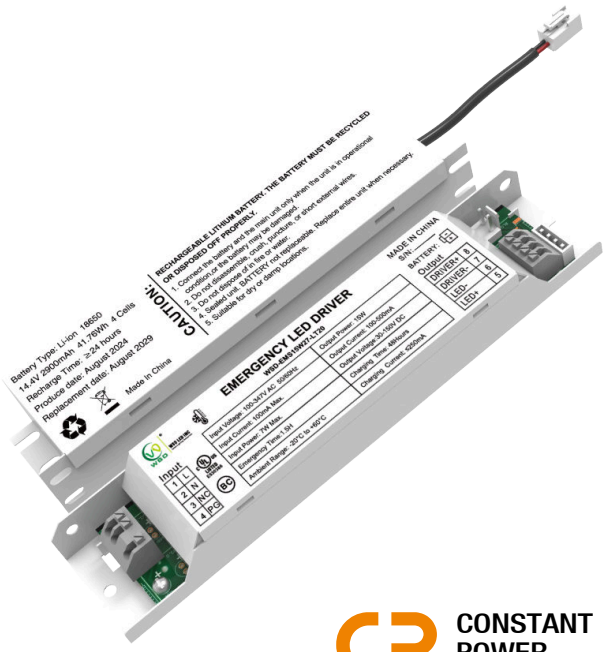

CONSTANT POWER
EMERGENCY OUTPUT

c UL us LISTED
E530386

BC

FEATURES

- UL listed for factory and field installation, Standard of CSA C22.2 NO.141, UL924.
- CEC Title 20 Compliant.
- Universal input voltage:100-347Vac,50/60Hz
- Constant power output.
- Battery protections:over charge,over discharge, short circuit protection.
- Operates in normal,damp,and extreme temperature environments.
- IP65 Test switch for protection to dust and water ingress.
- Compatible with a wide variety of LED arrays and AC drivers.
- Small size and separate battery variant provides maximum flexibility during installation.
- 5 year limited warranty.

ELECTRICAL SPECIFICATIONS

- Input Voltage:100-347Vac,50/60Hz
- Input Current: 100mA max
- Input Power: 7W max
- Output Voltage: DC30-150V
- Emergency Output Power: 15W
- Recharge Time: 48 Hours
- Discharge Time: 90 minutes
- Battery: Cold Rated Li-ion battery
- Battery Charging Cureent: ≤250mA
- Ambient Temp: -20°C to +60°C(-4°F to 140°F)

ORDERING GUIDE

Model Number	Input Voltage	Output Voltage	Output Power	Disharging Time	Battery Type
WSD-EMS15W27-LT20	100-347V AC,50/60Hz	30-150Vdc	15W	90 minutes	Cold rated Li-ion battery

DIMENSIONS

Driver- 7.4"x1.5"x1.14" (188mmx38mmx29mm)
mounting center-7.0"

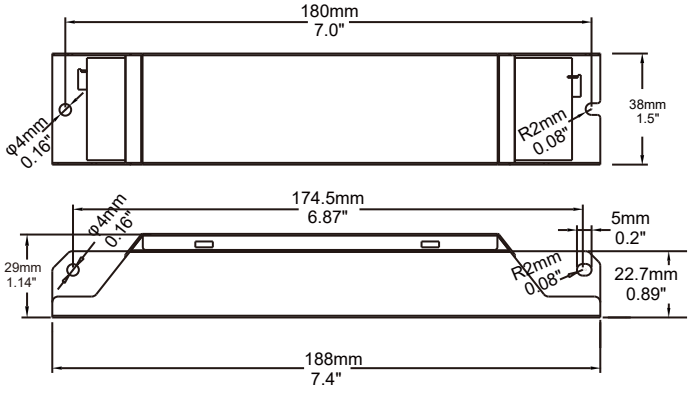

15W Battery case- 6.5"x1.61"x0.98"(165mmx41mmx24.9mm)
mounting center-6.2"

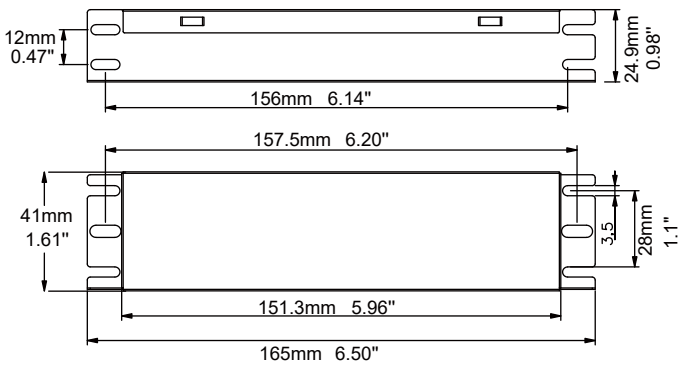

COLD PACK EMERGENCY LED DRIVER
WSD-EMS15W27-LT20

ACCESSORIES

M12 Metal Test Switch:

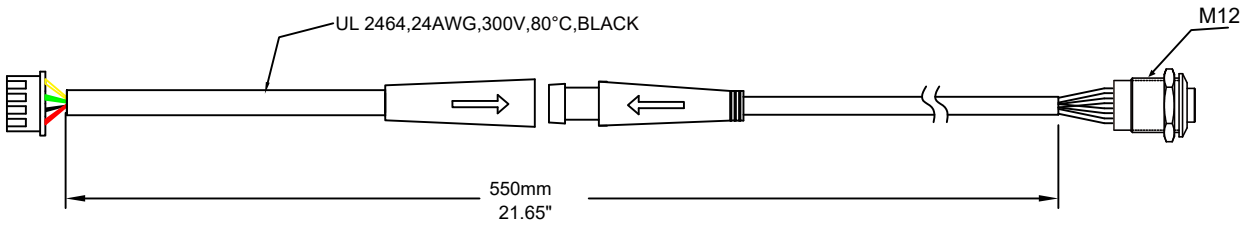

OPERATION

AC Operation: AC power is present, the LED load from the LED driver is normal power supply, AC LED driver output current can not exceed 4A, the emergency driver is charging in a standby mode,the red LED light on to indicate that it is charging.

Emergency Operation: When the AC power goes out, the emergency driver detects the AC power outage and automatically switch to the working emergency mode,the red LED light off. When the AC power is restored, the emergency driver backs to AC power working and starts re-charging, the red LED light on resumes battery charging.

WIRING DIAGRAM

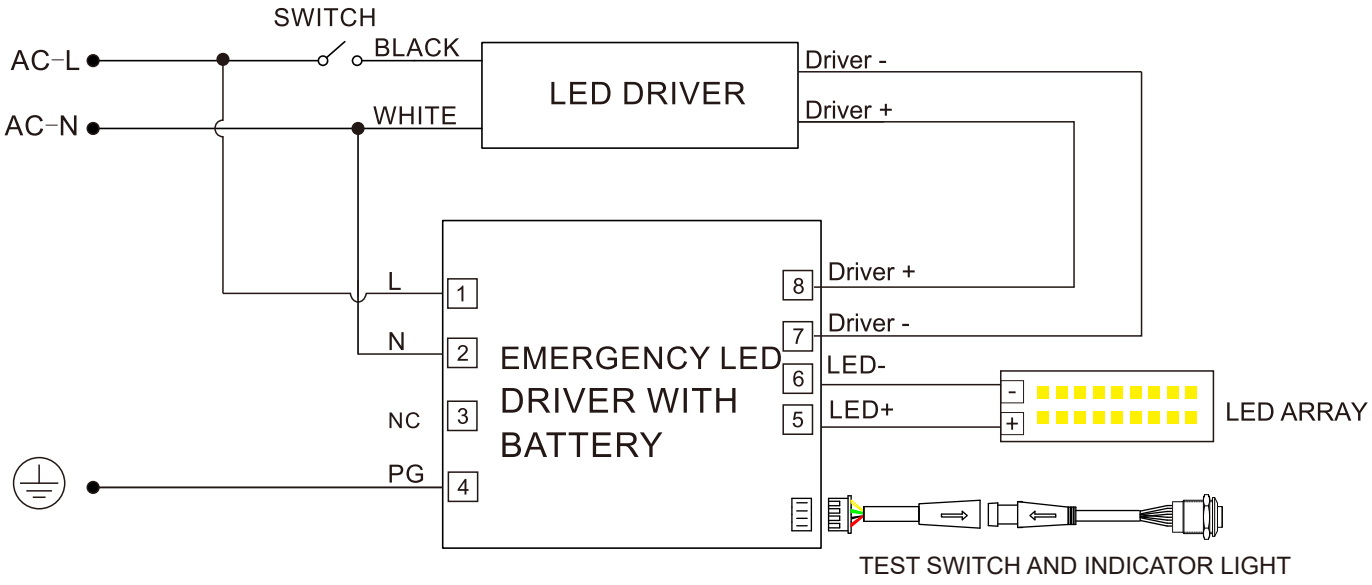

1.DO NOT MATE CONNECTOR UNTIL INSTALLATION IS COMPLETE AND AC POWER IS SUPPLIED.
2.TEST ACCESSORY LEADS-OBSERVE PROPER POLARITY WIRING.
3.PRESS TEST SWITCH TWICE TO CUT OFF THE EMERGENCY MODE FOR SHIPMENT AND STORAGE.

For ordering information, please contact sales@lightbulbsurplus.com

COLD PACK EMERGENCY LED DRIVER
WSD-EMS15W27-LT20

INSTRUCTION MANUAL

IMPORTANT SAFEGUARDS

When using electrical equipment, basic safety precautions should always be followed including the following:



CAUTION:Before installation, make certain the AC power is off.

READ AND FOLLOW ALL SAFETY INSTRUCTIONS.

- CAUTION: This emergency LED driver provides more than one power supply output source.To reduce the risk of electrical shock, servicing of this equipment should be performed by qualified personnel only.
- CAUTION: Do not connect the battery pack connector until all other wiring are complete and AC power is on.
- CAUTION: This emergency LED driver requires an un-switched AC power source of 100-347Vac,50/60Hz .The AC driver must be on the same branch circuit as the emergency LED driver. Ambient temperature: -20°C to +60°C.
- CAUTION: The use of accessory equipment not recommended by the manufacturer may cause an unsafe condition, void warranty, and result in non-compliance with UL specifications.
- CAUTION: Use with grounded, UL listed, dry, or damp location-rated fixtures, and the case should be grounded.
- CAUTION: Do not use outdoors.Do not mount near gas or electric heaters.
- CAUTION: Do not attempt to service the battery. A sealed, non-maintenance battery is used that is not field replaceable. Replace the entire unit when necessary.
- CAUTION: Do not use this equipment for other than its intended use. The emergency LED driver is not for in an air-handling fixture.
- CAUTION: The emergency LED driver should be mounted in locations and at heights where it will not be subjected to tampering by unauthorized personnel.
- IMPORTANT: Please charge the battery consistently for >48 hours for the first time usage to activate the whole battery cells of discharging/charging duration.
- IMPORTANT: Customers are advised to charge emergency LED drivers 48 hours every 6 months during storage, which could be stocked for 1 year at most. If customers don't install and recharge for more than 1 year, the batteries may be damaged. This is not covered in the warranty, and we would charge for replacement.
- IMPORTANT: Lighting fixture manufacturers, electricians, and end-users need to ensure product system compatibility test before using and final installation.

c UL US
LISTED

Li-ion

THIS PRODUCT CONTAINS A RECHARGEABLE LI-ION BATTERY.
THE BATTERY MUST BE RECYCLED OR DISPOSED OFF PROPERLY.

For ordering information, please contact sales@lightbulbsurplus.com