LED DISK DOWN LIGHT

WSD LED INC
Green Lighting Resources

Wattages: 15W

LED Disk Down Light can be widely used in indoor lighting (Wet location) suitable for office,indoor playground,hotle, shop,indoor entertainment places,and other indoor place.



TIME SWITCH
1MIN (FACTORY SETTINGS)





PIR SENSOR
(Standard)





D556-90-CCT-WH-MS



CCT SWITCH
4000K (FACTORY SETTINGS)



D236D-90-CCT-WH

Features

- Energy efficient: save up to 80% in energy costs
- High lumen output
- Mercury-free
- Instant-on light
- 50,000 hours at 70% lumen maintenance rated life
- CCT:2700-5000K
- PIR Sensor Function Available
- 5 years manufacturer warranty



SPECIFICATION		
TYPE	D556-90-CCT-WH-MS	D236D-90-CCT-WH
WATTAGE	15W	15W
LUMEN	1135.9 lm	1218.3 lm
EFFICACY	> 75 lm/W	> 80 lm/W
CCT	2700K,3000K,3500K,4000K,5000K	
CRI	> 90	
INPUT VOLTAGE	AC120V	
LIGHTING ANGLE	114	
DIMMABLE	Non-dimmable	
LED TYPE	SMD2835	
CERTIFICATE	ETL,Energy Star	ETL,Energy Star
TIME ADJUSTABLE	1min/5min/8min	none
DESCRIPTION	PRI Sensor and CCT Adjustable (5-6")	CCT Adjustable (5-6")
LIFE TIME	50000 hours	
WARRANTY	5 year limited	

LED DISK DOWN LIGHT

WSD LED INC
Green Lighting Resources

Wattages: 15W

DIMENSION

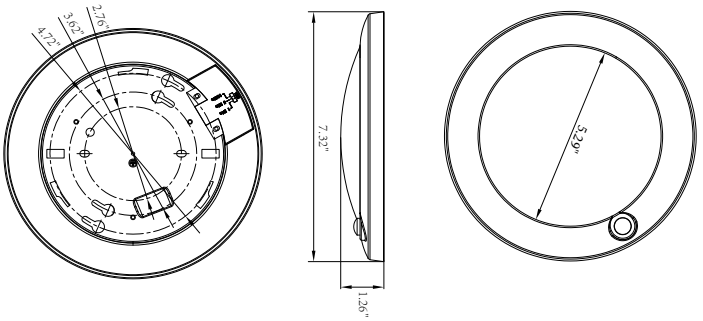

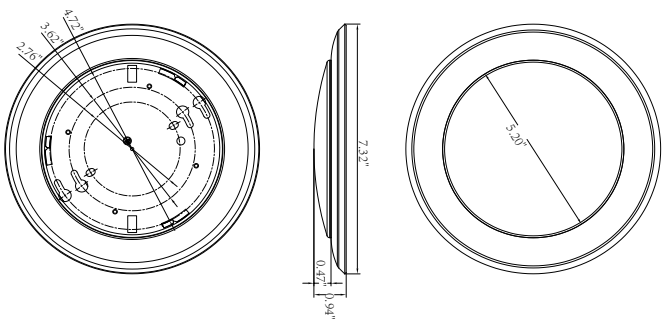

WATTAGE	D556-90-CCT-WH-MS
NT. WEIGHT	1.01 lbs
OUTER BOX	21.26" x 15.75" x 8.07" (20 pcs)

WATTAGE	D236D-90-CCT-WH
NT. WEIGHT	0.84 lbs
OUTER BOX	17.32" x 15.59" x 7.99" (20 pcs)

ACCESSORIES (SOLD SEPARATELY)

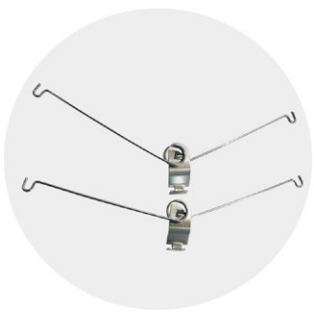

SPRING CARD BUCKLE



E26 LAMP HOLDER

ACCESSORIES (Standard)



Wire Nuts



Screws

ORDERING INFORMATION

EXAMPLE:

D556-90-CCT-WH-MS/D236D-90-CCT-WH

D	556	90	CCT	WH	MS
PRODUCT	NUMBER	CRI	CCT	FINISH	CONTROL
D LED DISK DOWN LIGHT	**556** - (556) **236** - (236)	**90** CRI=90	**CCT** CCT Adjustable	WH - (White)	MS - (PRI Sensor)

LED DISK DOWN LIGHT

WSD LED INC
Green Lighting Resources

Wattages: 15W

INDUCTION RANGE:

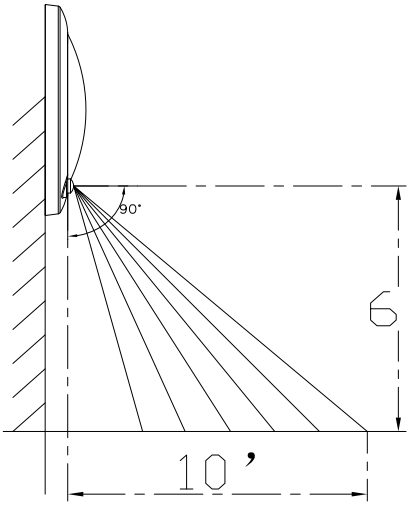

Hanging installation:
The mounting height is 6 feet
and the sensing distance is 10
feet
sensing range 90 degrees

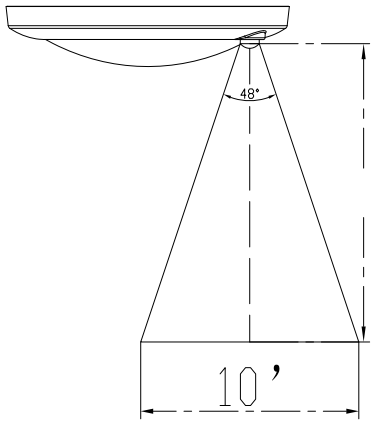

Installation of ceiling:
Mounting height 11 feet,
sensing range 48 degrees

PHOTOMETRICS

For complete IES files, please visit our website.

D556-90-CCT-WH-MS

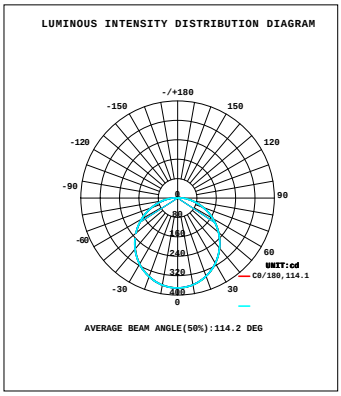

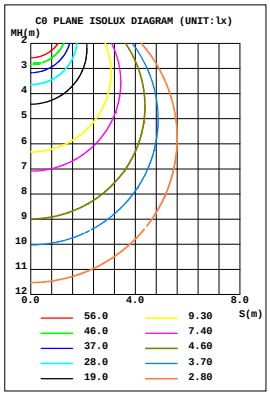

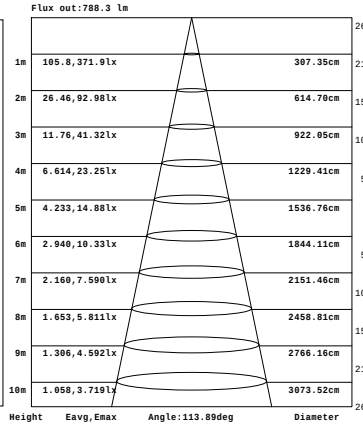

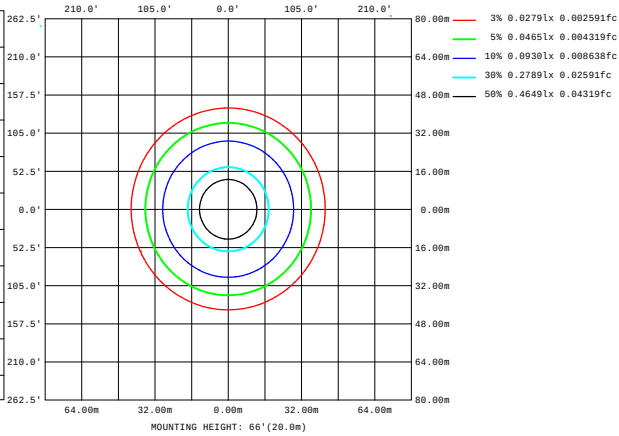

D236D-90-CCT-WH

